Operating Manual

Combi 508

Multi purpose Centrifuge

Date of Purchase	
Serial No.	
Place of purchase	

hanil

since 1958

Contact Us

If you have and questions, contact Hanil Scientific Inc. or place of purchase.

+82-2-3472-0727
Inquiry: info@ihanil.com
Order: sales@ihanil.com
Tech. support: techsupport@ihanil.com

CONTENTS

1. General Considerations

1.1 Safety

Follow precautions and all the safety requirements described on this user manual to prevent any damage and failure of equipment and loss of lives.

1. The centrifuge should be installed on flat surface to maintain level.

2. Check the voltage to be used, before connecting the centrifuge to the power source.

3. Only use rotors, parts, and accessories provided by Hanil Scientific Inc.
   Hanil Scientific Inc. is not responsible for damages of the device and accidents caused by using parts and accessories not recommended.

4. Do not exceed the maximum rated speed of the rotor or buckets in use.

5. Make sure to prepare necessary safety measures before using samples that are toxic or radioactive samples or pathogenic or samples or infectious blood.

6. Substances that may generate volatile or explosive vapor can not be centrifuged.

7. The balancing work of samples should done in advance before operation.

8. To ensure safe use of the device, do not expose the device to strong acids, strong bases, cesium, salt, or alkaline detergents.

8. If the centrifuge is contaminated by toxic or radioactive samples or infectious blood samples, remove contaminants completely and take needful actions such as ventilation or isolation of centrifuge.

9. Before operation, rotor and chamber should be dry.

10. Do not attempt to slow or stop the spinning rotor by hand.

11. Only centrifuge with rotor and rotor lid firmly tightened.

12. Do not block vents.

13. When serving the centrifuge, be sure to remove contaminants in advance.

14. Please contact the place of purchase or Hanil Scientific Inc. for product repairs.

15. According to IEC61010-2-020 maintain a 30cm “clearance envelope” around the centrifuge while the rotor is spinning.

16. Turn the power switch off after using the device.

17. Unplug the power plug before cleaning or left unused for a long period of time.

1. General Considerations

1.2 Transport & Storage

- The device and the accessories may only be stored in dry rooms

-Storage-
Ambient temperature 5℃~35℃
Maximum relative humidity 30%~85%
Air pressure 500~1060hpa

- Only lift and transport the device with sufficient number of helpers.

-Transport-
Ambient temperature -10℃~40℃
Maximum relative humidity 10%~90%
Air pressure 500~1060hpa

1.3 Safety label attached to a product

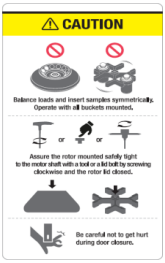

Insert tube symmetrically.

Firmly tighten the rotor lid.

Watch your figers when close the lid.

Mark indicating danger and warning.

Mark indicating a place in danger of electric shock.

1.4 Electric safety information

1. It is recommended that switchgear or circuit breakers and overcurrent protection devices be installed near the equipment.
2. Use a power cord only provided with equipment.
3. Use sockets with a protective earth conductor and suitable power cord.
4. Do not use an extension cord.
5. Do not place anything on the powercable
6. Do not block vents.
7. If you have the following emergencies, shut off the power supply and unplug the powercord from outlet and contact your place of purchase.

-Unusual noises or smell from the equipment.
-Damage or wear of a power cord.
-Breakdown of circuit breaker, fuse or safety device.
-If you spill liquid on the equipment.
-If theequipment has been damaged.

2. Product description

2.1 Structure

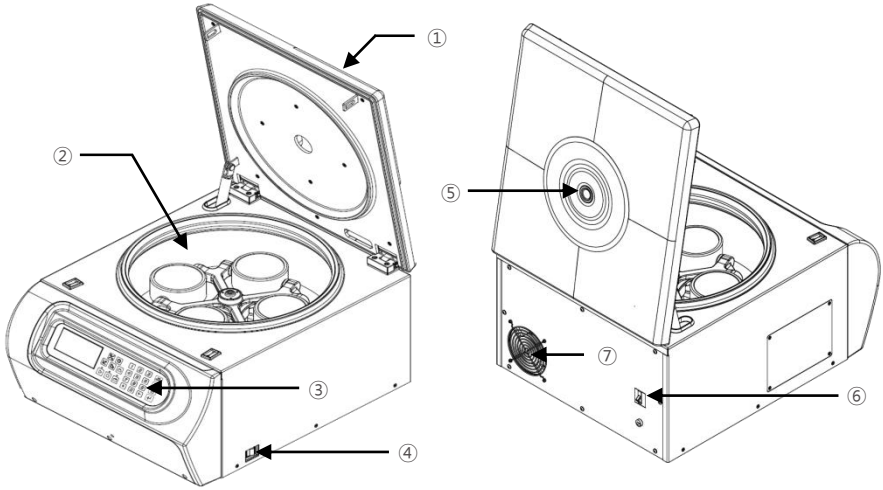

① Lid
② Chamber: Where the rotor is loaded.
③ Display&Control panel: The display shows time, rpm,temperature.
④ Power switch : On/off the centrifuge.
⑤ RPM measuring window: Visual inspection for rotor stop or for a speed check using a tachometer.
⑥ Circuit breaker: It prevents overvoltage or short circuit.
⑦ Cooling fan

2.2 Delivery package

① Combi 508
② Power Cable
③ Operating manual
④ Level aligner
⑤ Optional items: Rotors

2. Product description

2.3 Technical Specifications

Max. RPM (Fixed/Swing-out)	8,000 / 4,000 rpm
Max. RCF (Fixed/Swing-out)	8,279 / 3,515 xg
Max. Capacity (Fixed/Swing-out)	6 x 85 mL / 4 x 750 mL
ACC/DEC ramps	10/10 steps
Time control	< 2 hr, continuous
Program memory	100
Noise level	≤ 65 dB
Imbalance cutoff / tracking	Yes / Yes
Rotor identification	Automatic
Dimension (W x D x H, mm)	530 x 676 x 400
Weight without rotor	61 kg
Power requirement	1.0 kVA
Power input (V, Hz)	210V~240V, 50/60 Hz (110V optional)
Cat. No.	CB-508

3. Installation

3.1 Packing Inspection

- Check packing conditions carefully, before unpacking.
- Contact Hanil Scientific Inc. immediately if damages found.
- Check the delivery for completeness.

- You can get contact details on packing boxes and the back of the manual.

3.2 Installation

3.2.1 Selecting the location

Installation on hard and flat ground.
- Centrifuge should be installed on hard and flat place.
- If the centrifuge is installed in an inclined place, the shaft may be bent due to the weight of the rotor.

Goodventailation.
- For air circulation and safety, maintain a 30cm“clearance envelope”around the centrifuge while the rotor is spinning.

Constant temperature/humidity
- Centrifuge equipped with the sensitive electronic software which is fragile with humidity and temperature.
- Must avoid direct ray or heater and be put in the ambience of controlled temp.and air.

Avoid the corrosive gas
- Install the centrifuge in a place where corrosive gas is not generated.
- Sulfur dioxide gas and chlorine gas may cause corrosion.

Leveling
- The shaft should be put exactly vertical on the hotizontaliy flat ground by the leveling tool

3. Installation

3.1 Packing Inspection

3.2.2 Power Connection

- Connect the device to voltage sources which correspond to the electrical requirements on the label attached to the device.
- Use sockets with a protective earth conductor and provided powercord.

1. Connect the power cable to the power socket on the right side of the product and plug the cord into the outlet.
2. Switch the centrifuge on using the power switch on the right side of the device.

4. Operation

4.1 Operation Panel

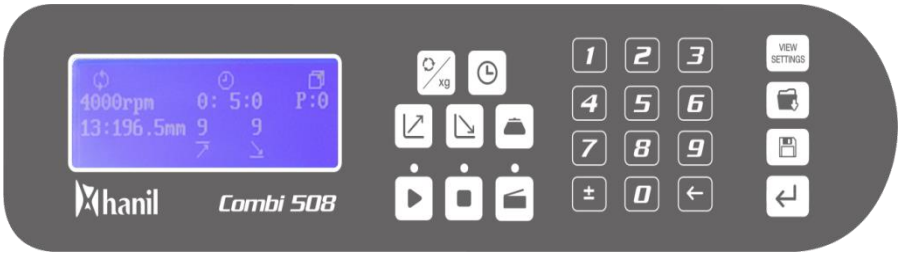

Button		Function
	RPM/RCF	Set RPM /RCF
	Time	Set centrifugation time
	Accel	Set acceleration rates in 10 steps
	Decel	Set acceleration rates in 10 steps
	Rotor	Enter the rotor id manually
	Start	Start centrifugation
	Stop	Stop centrifugation
	Open	Open centrifuge lid
VIEW SETTINGS	View setting	Check the set value during centrifugation
	Call	Call up a program
	Save	Save up a program
	Enter	Set the value

4. Operation

4.2 Opening and closing the lid

- The lid can only be opened if the centrifuge is switched on.
- Do not reach with your fingers between the housing and lid.
- Close the lid completely before operation.

•Opening the lid

Press the ( ) door key

•Closing the lid

Put the lid on and press the edge of the lid.

4.3 Loading tubes

- Only use tubes provided or approved by Hanil Scientific Inc.
- Always use the same type of tube.
- Tubes should be loaded symmetrically.
- Do not exceed the maximum rated speed of the tube.
- Same volume of sample should be put on tubes.
- Check symmetric loading by balncing tubes with scales.

① Check the maximum load for each tube.
② Put tubes into rotor holes.
③ Tubes located opposite each other must be the same type and contain the same quantity.

4. Operation

4.4 Setting RPM/RCF

① Press the RPM ( ) button.

② Press the numeric key to set the required RPM/RCF.

③ Press the Enter ( ) button to fix the value.

4.5 Setting run time

① Press the Time ( ) button.

② Press the numeric key to set the required centrifugation time.(<2hr)

③ Press the Enter ( ) button to fix the value.

4.6 Setting Accelation/Deceleration rate

① Press the Accel ( ) key or 'Decel ( )key.

② Press the Numeric keys to select the Acc/Dec step.(0~9 steps)
▶ The higher the setting step, the faster the accelation or deceleration speed.
▶ Decel step'0'means natural brake.

③ Press the Enter ( ) button to fix the value.

4.7 Start the centrifugation run

① Check the all parameters are correct and the lid is closed.

② Press Start ( ) button.

4.8 End the centrifugation

① Press Stop ( ) key to stop centrifugation.

4.9 Saving / Recall programs

Saving a program

① Set the centrifugation time/speed/Accel/Decel values.

② Press Save ( ) button.

▶ You can store 100 programs on the device: 0~99

③ Select the program slot by pressing the numeric keys.

④ Press the Enter ( ) button.

Recall a programs

① Press the Call ( ) button.

② Press the program slot by pressing the numeric keys

③ Press the Enter ( ) button to call up a program.

5. Maintenance

5.1 Care instructions

• The following procedures should be performed regulary.

①Regularly inspect the rotor chamber for check the motor shaft is nomal.
②Rotate the shaft with your hand to make sure it turns smoothly
③Use the stopwatch to check that the time setting is correct
④If you find any damages, do not use the device. Contact Hanil Scientific Inc.

5.2 Cleaning

• Before cleaning the centrifuge, be sure to switch off the device and disconnect the power cord.

• Oustside of the device
①Clean the outside of the device with a soft and dry cloth.
②Do not use aggressive chemicals on the device such as alchol, benzene, acetone or phenol.
③If the device is contaminated, use a mild cleaning fluid to clean.
④Make sure do not scratch the surface of the device when cleaning it.
▶ Do not use a metal sponge.
▶ If the device is rusted, remove it with a mild detergent and wipe it with a dry cloth.

• Chamber
①If the rotor chamber is not dry, wipe moisture from the chamber with a dry cloth.
②Clean the chamber and motor shaft at least once a week using a mild cleaning fluid.

• Rotor
①To prevent corrosion, take out the rotor from the rotor chamber.
②If any sample is spilt inside the rotor, wash and dry the rotor well.

▶ If you have any questions about cleaning your device, please contact us.

5.3 Disposal

In case of product is to be disposed of,
the local wastes laws and regulations are to be observed.

6. Troubleshooting

6.1 General errors

Problem	Recommended Action
Power failure	Check the power cord connection. Check the power fuse of the device.
Device cannot be started	Check the lid is closed completely.
Lid cannot be opened	Press the ‘Lid open button’.
Lid cannot be closed	Remove the dirt at the door latch and close the lid. Checkthe lid latch is not damaged.
Unusual noise and vibration	Check the device whether it is installed on the hard and flat place
	Reload the rotor symmetrically. Reload the tubes symmetrically. Tighten the clamping of the rotor with wrench by turning clockwise

6. Troubleshooting

6.2 Error messages

If you cannot remedy an error with recommended actions, please contact Hanil Scientific Inc.

Error code	Problem	Cause	Recommended Action
E1	Imbalance error	• Asymmetrical placement of tubes. • Irregular volume of sample in tubes. • Loosenedrotor to the shaft. • Swaying or operation the unstable ground.	• Check the tightness of rotor loading. • Check the proper loading of tubes. • Check the stable ground or worktable.
E2	Over speed error	• 10% over the set RPM. • Incorrect tuning of motor and controller.	• Check controller and motor. • Turn the device off and then on again
E3	Motor overheat	• Motor temperature rises.	• Switch power off, restart after 1 hour
E4	Door Open! Fast stop!	• Lid open while centrifugation	• Switch power off • Check lid latch
E5	Low speed error	•200rpm not reached within 2 seconds after start	•Turn the device off and then on again
E6	System error	•System error	• Contact Hanil Scinetific Inc.

6. Troubleshooting

6.3 Emergency lid open

If the centrifug door cannot be opened, you can activted the emergency open manually.

1. Wait for rotor to stop before activating the emergency open.
2. Insert the provided T-wrench into the emergency release hole and turn it clockwise until the lid is released.

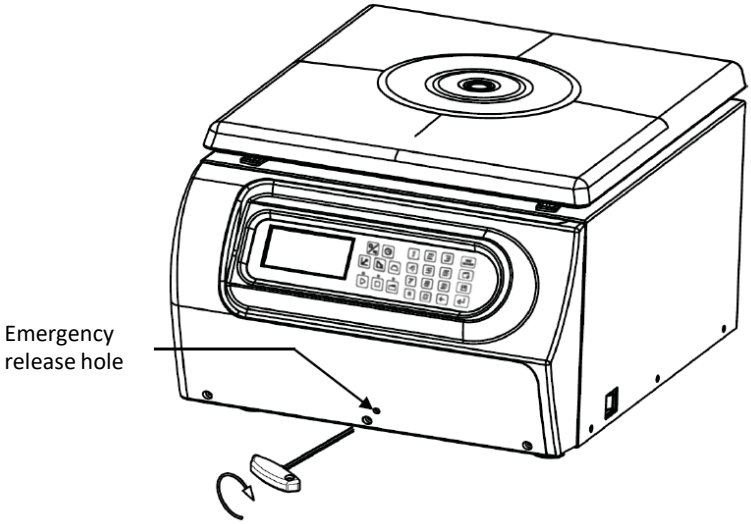

7. Rotor

7.1 Fixed angle rotors

Rotor		Tube Capacity Bottom Type	Required Adaptor	Bore Ø x L (mm) Radius (mm)	Max. RPM (rpm) Max. RCF (xg)
A0.2-48 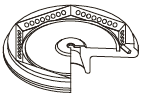	Hole angle : ∠45° Max. Capacity : 48 x 0.2 mL Size (ø x H) : ø200 x 56 mm **Incl. a coupling bolt lid**	0.2 mL -	-	6.5 x 17 88.9	12,500 15,530
		0.2 mL PCR strip	-		
		0.2 mL -	-	6.5 x 17 88.9	8,000 6,361
		0.2 mL PCR strip	-		
A2.0-24 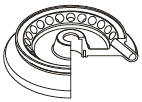	Hole angle : ∠40° Max. Capacity : 24 x 1.5/2.0 mL Size (ø x H) : ø202 x 79 mm Max. height for tube fit : 46 mm **Incl. a coupling bolt lid**	1.5/2.0 mL -	-	11.5 x 38 80.8	15,000 20,325
		0.5 mL -	**TR0.5**	8 x 37 76.5	15,000 19,244
		0.2 mL -	**TR0.2**	6 x 21 67	15,000 16,854
		1.5/2.0 mL -	-	11.5 x 38 80.8	8,000 5,781
		0.5 mL -	**TR0.5**	8 x 37 76.5	8,000 5,473
		0.2 mL -	**TR0.2**	6 x 21 67	8,000 4,795
A2.0-36 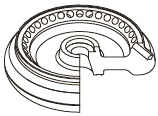	Type : Fixed Angle Rotor 30° Max. Capacity : 36 x 1.5/2.0 mL Size (ø x H) : ø240 x 64 mm Max. height for tube fit : 49 mm **Incl. a coupling bolt lid**	1.5/2.0 mL Micro-filter tube	-	11.5 x 38 115.7	14,000 25,353
		0.5 mL	**TR0.5**	8 x 37 111	14,000 24,323
		0.2 mL	**TR0.2**	6 x 21 100	14,000 21,913
		1.5/2.0 mL Micro-filter tube	-	11.5 x 38 115.7	8,000 8,279
		0.5 mL	**TR0.5**	8 x 37 111	8,000 7,942
		0.2 mL	**TR0.2**	6 x 21 100	8,000 7,155
A10-12 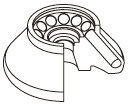	Hole angle : ∠36° Max. Capacity : 12 x 10 mL Size (ø x H) : ø179.9 x 82 mm Max. height for tube fit : 85.5 mm **Incl. a coupling bolt lid**	10 mL Round	-	16.3 x 74.5 85.1	15,000 21,407
					8,000 6,089
A15-12 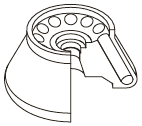	Hole angle : ∠30° Max. Capacity : 12 x 15 mL Size (ø x H) : ø222.7 x 106 mm Max. height for tube fit : 121 mm **Incl. a coupling bolt lid**	15(16) mL Round	-	17 x 96 106	15,000 26,664
					8,000 7,585
A15c-12 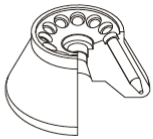	Hole angle : ∠25° Max. Capacity : 12 x 15 mL conical Size (ø x H) : ø215 x 121 Max. height for tube fit : 124.5 mm **Incl. a coupling bolt lid**	15 mL Conical	-	17 X 115 99.4	15,000 25,004
					8,000 7,105

7. Rotor

7.1 Fixed angle rotors

Rotor		Tube Capacity Bottom Type	Required Adaptor	Bore Ø x L (mm) Radius (mm)	Max. RPM (rpm) Max. RCF (xg)
A50-6 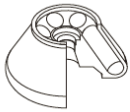	Hole angle : ∠30° Max. Capacity : 6 x 50 mL Size (ø x H) : ø200 x 109 mm Max. height for tube fit : 126.5 mm **Incl. a coupling bolt lid**	50 mL Round	-	29 x 100 96.1	15,000 24,174
		15 mL Round	TR15(50)	17 x 94 89.9	15,000 22,614
		15 mL Conical	TR15c(50)	17 x 105 91	15,000 22,891
		50 mL Round	-	29 x 100 96.1	8,000 6,876
		15 mL Round	TR15(50)	17 x 94 89.9	8,000 6,433
		15 mL Conical	TR15c(50)	17 x 105 91	8,000 6,511
A50c-6 	Hole angle : ∠23° Max. Capacity : 6 x 50 mL conical Size (ø x H) : ø205.7 x 119 mm Max. height for tube fit : 118.1 mm **Incl. a coupling bolt lid**	50 mL Conical	-	30 x 108.6 91	15,000 22,891
					8,000 6,511
A50-8 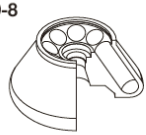	Hole angle : ∠30° Max. Capacity : 8 x 50 mL Size (ø x H) : ø213 x 110.7 mm Max. height for tube fit : 126.5 mm **Incl. a coupling bolt lid**	50 mL Round	-	29 x 100 98.9	15,000 24,878
		15 mL Round	TR15(50)	17 x 94 92.8	15,000 23,344
		15 m Conical	TR15c(50)	17 x 105 93.9	15,000 23,621
		50 mL Round	-	29 x 100 98.9	8,000 7,077
		15 mL Round	TR15(50)	17 x 94 92.8	8,000 6,640
		15 mL Conical	TR15c(50)	17 x 105 93.9	8,000 6,719
A85-6 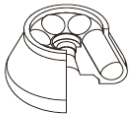	Hole angle : ∠25° Max. Capacity : 6 x 85 mL Size (ø x H) : ø209.1 x 112 mm Max. height for tube fit : 115.4 mm **Incl. a coupling bolt lid**	85 mL Round	-	38.3 x 95 97.6	15,000 24,551
		50 mL Round	TR50(85)	29 x 95 92.9	15,000 23,369
		50 mL Conical	TR50c(85)	29.5 x 100 93	15,000 23,394
		15 mL Round	TR15(85)	17 x 94 89	15,000 22,388
		15 mL Conical	TR15c(85)	17 x 100 89.2	15,000 22,438
		85 mL Round	-	38.3 x 95 97.6	8,000 6,983
		50 mL Round	TR50(85)	29 x 95 92.9	8,000 6,647
		50 mL Conical	TR50c(85)	29.5 x 100 93	8,000 6,654
		15 mL Round	TR15(85)	17 x 94 89	8,000 6,368
		15 mL Conical	TR15c(85)	17 x 100 89.2	8,000 6,382
A250-6 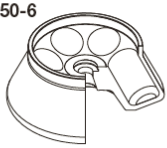	Hole angle : ∠25° Max. Capacity : 6 x 250 mL Size (ø x H) : ø295.6 x 147.8 mm Max. height for tube fit : 124 mm **Incl. a coupling bolt lid**	250 mL Round	-	62 x 103 138.3	8,000 9,896

7. Rotor

7.2 Swing-out Rotors

S500-4

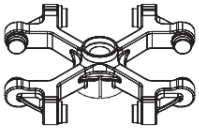

∠90°
Max. RPM : 4,500
Size (W x D x H)
: 262 x 262 x 55 mm

Bucket/Adaptor for S500-4

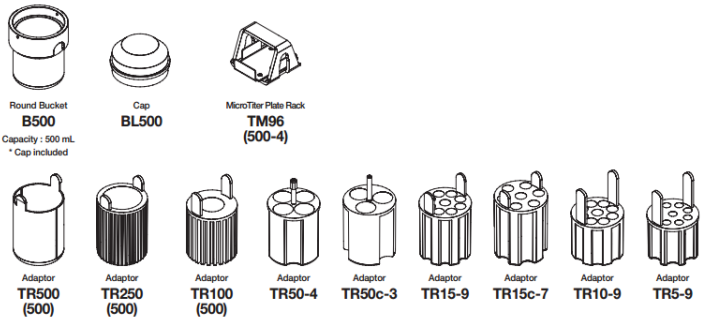

Buckets and Tube Racks of S500-4

Bucket	Required Adaptor	Tube Capacity Bottom Type	Tube per Adaptor / Rotor	Bore (Ø x L, mm)	Max. height for tube fit (mm)	Max. RPM (rpm) Max. RCF (xg)
B500	TR500(500)	500 mL Flat	1 / 4	73 x 125	142	4,500 4,347
	TR250(500)	250 mL Flat	1 / 4	62 x 100	139.5	4,500 4,290
	TR100(500)	100 mL (85 mL) Round	1 / 4	38.5 x 84.5	139.5	4,500 4,290
	TR50-4	50 mL Round	4 / 16	29.5 x 85.5	139.5	4,500 4,290
	TR50c-3	50 mL Conical	3 / 12	30 x 90	140	4,500 4,302
	TR15-9	15 mL Round	9 / 36	16.5 x 85	139.5	4,500 4,290
	TR15c-7	15 mL Conical	7 / 28	17 x 95.5	140.5	4,500 4,313
	TR10-9	10 mL Round	9 / 36	17 x 64	138.9	4,500 4,279
	TR5-9	5 mL Round	9 / 36	13 x 64	138	4,500 4,256
TM96(500-4)		MTP	1 / 4	-		4,000 2,755

Radius : 194 mm
Bucket bore (ø x L, mm) : 80 x 111
Max. height for tube fit :
144 mm (w/ cap), 157.7 mm (w/o cap)
Incl. a cap

Combi R515
Max. RPM : 4,500 Max. RCF : 4,392 xg
Combi 508
Max. RPM : 4,000 Max. RCF : 3,435 xg

Radius : 154 mm
MTP holder size (w x d x L, mm) : 87 x 128.5 x 53
Max. height for tube fit : 87 x 128.5 x 53 mm

7. Rotor

7.2 Swing-out Rotors

S750-4

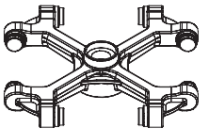

∠90°
Max. RPM : 4,000 rpm
Size (W x D x H)
: 277 x 277 x 55 mm

Bucket/Adaptor for S750-4

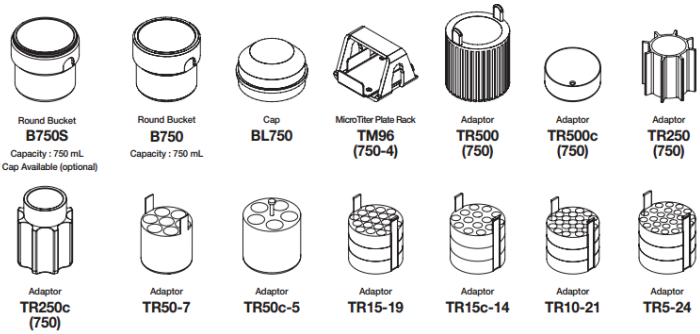

Buckets and Tube Racks of S750-4

Bucket	Required Adaptor	Tube Capacity Bottom Type	Tube per Adaptor / Rotor	Bore (Ø x L, mm)	Max. height for tube fit (mm)	Max. RPM (rpm) Max. RCF (xg)
B750S / B750 	-	750 mL Flat	1 / 4	99 x 103	150	4,000 3,515
	TR500(750)	500 mL Flat	1 / 4	75.5 x 98.7	138.7	4,000 3,458
	TR500c(750)	500 mL conical Conical	1 / 4	99 x 58	142	4,000 3,515
	TR250(750)	250 mL Flat	1 / 4	62.3 x 87	138	4,000 3,443
BL750 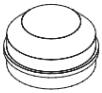	**TR250c(750)**	250 mL conical Conical	1 / 4	60.5 x 124.4	138.5	4,000 3,452
	TR50-7	50 mL Round	7 / 28	29.2 x 97	138	4,000 3,443
	TR50c-5	50 mL conical Conical	5 / 20	29 x 91	142	4,000 3,515
	TR15-19	15 mL Round	19 / 76	17.2 x 87	138	4,000 3,443
	TR15c-14	15 mL conical Conical	14 / 56	17 x 89	140	4,000 3,479
Radius : 196.5 mm Bucket bore (ø x L, mm) : 99 x 103 Max. height for tube fit : 142 mm (w/ cap), 159 mm (w/o cap)	**TR10-21**	10 mL Round	21 / 84	16 x 87	138	4,000 3,443
	TR5-24	3 mL / 5 mL Round	24 / 96	13.2 x 60 (3 mL) 13.2 x 87 (5 mL)	138	4,000 3,443
TM96(750-4) 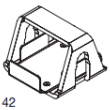 Radius : 163.5 mm MTP holder size (w x d x L, mm) : 88 x 128.5 x 42 Max. height for tube fit : 88 x 128.5 x 42 mm		MTP	1 / 4	88 x 128.5 x 42		4,000 2,925

Hanil Scientific Inc.
16 Arayukro, Gimpo 10136, Rep. of KOREA
T. 02-3452-8965
info@ihanil.com
www.ihanil.com