BINDER
Best conditions for your success

Operating Manual

APT.line™ BD (E2)

Incubators with natural convection

APT.line™ ED (E2)

Drying and heating ovens with natural convection

APT.line™ FD (E2)

Drying and heating ovens with forced convection

with microprocessor temperature controller

BINDER GmbH

Address	Post office box 102 D-78502 Tuttlingen
Tel.	+49 7462 2005 0
Fax	+49 7462 2005 100
Internet	http://www.binder-world.com
E-mail	info@binder-world.com
Service Hotline	+49 7462 2005 555
Service Fax	+49 7462 2005 93 555
Service E-Mail	service@binder-world.com
Service Hotline USA	+1 866 885 9794 or +1 631 224 4340 x3
Service Hotline Asia Pacific	+852 390 705 04 or +852 390 705 03
Service Hotline Russia and CIS	+7 495 988 15 16

Issue 12/2014 Art. No. 7001-0026

EC – declaration of conformity BD

CE

EG – KONFORMITÄTSERKLÄRUNG
EC - DECLARATION OF CONFORMITY
CE - DECLARATION DE CONFORMITE

Anbieter / Supplier / Fournisseur:	BINDER GmbH
Anschrift / Address / Adresse:	Im Mittleren Ösch 5, D-78532 Tuttlingen
Produkt / Product / Produit:	Inkubatoren mit freier Konvektion Incubators with natural convection Incubateurs à circulation d'air naturelle
Typenbezeichnung / Type / Type:	BD 23, BD 53, BD 115, BD 240, BD 400, BD 720

Die oben beschriebenen Produkte sind konform mit folgenden EG-Richtlinien:
The products described above are in conformity with the following EC guidelines:
Les produits décrits ci-dessus sont conformes aux directives CE suivantes:

Niederspannungsrichtlinie 2006/95/EG Low voltage directive 2006/95/EC Directive basse tension 2006/95/CE	Richtlinie 2006/95/EG des Europäischen Parlaments und des Rates vom 12. Dezember 2006 zur Angleichung der Rechtsvorschriften der Mitgliedstaaten betreffend elektrische Betriebsmittel zur Verwendung innerhalb bestimmter Spannungsgrenzen Council Directive 2006/95/EC of 12 December 2006 on the harmonization of the laws of Member States relating to electrical equipment designed for use within certain voltage limits Directive 2006/95/CE du Parlement Européen et du Conseil du 12 décembre 2006 concernant le rapprochement des législations des États membres relatives au matériel électrique destiné à être employé dans certaines limites de tension
EMV-Richtlinie 2004/108/EG EMC Directive 2004/108/EC Directive CEM 2004/108/CE	Richtlinie 2004/108/EG des Europäischen Parlaments und des Rates vom 15. Dezember 2004 zur Angleichung der Rechtsvorschriften der Mitgliedstaaten über die elektromagnetische Verträglichkeit und zur Aufhebung der Richtlinie 89/336/EWG. Directive 2004/108/EC of the European Parliament and of the Council of 15 December 2004 on the approximation of the laws of the Member States relating to electromagnetic compatibility and repealing Directive 98/336/EEC. Directive 2004/108/CE du Parlement Européen et du Conseil du 15 décembre 2004 relative au rapprochement des législations des États membres concernant la compatibilité électromagnétique et abrogeant le directive 98/336/CEE.

Die oben beschriebenen Produkte tragen entsprechend die Kennzeichnung CE.
The products described above, corresponding to this, bear the CE-mark.
Les produits décrits ci-dessus, en correspondance, portent l'indication CE.

Die oben beschriebenen Produkte sind konform mit folgenden harmonisierten Normen:
The products described above are in conformity with the following harmonized standards:
Les produits décrits ci-dessus sont conformes aux normes harmonisées suivantes:

Sicherheit / safety / sécurité:	
EN 61010-1:2010	Sicherheitsbestimmungen für elektrische Mess-, Steuer-, Regel- und Laborgeräte – Teil 1: Allgemeine Anforderungen (DIN EN 61010-1:2011, VDE 411-1:2011) Safety requirements for electrical equipment for measurement, control, and laboratory use – Part 1: General requirements (IEC 61010-1:2010, BS EN 61010-1:2010) Règles de sécurité pour appareils électriques de mesurage, de régulation et de laboratoire – Partie 1: Prescriptions générales (CEI 61010-1:2010, NF EN 61010:2011)
EN 61010-2-010:2003	Sicherheitsbestimmungen für elektrische Meß-, Steuer-, Regel- und Laborgeräte – Teil 2-010: Besondere Anforderungen an Laborgeräte für das Erhitzen von Stoffen (DIN EN 61010-2-010:2004) Safety requirements for electrical equipment for measurement, control, and laboratory use – Part 2-010: Particular requirements for laboratory equipment for the heating of materials (IEC 61010-2-10:2005, BS EN 61010-2-10:2003) Règles de sécurité pour appareils électriques de mesurage, de régulation et de laboratoire – Partie 2-010 : Prescriptions particulières pour appareils de laboratoire utilisés pour l'échauffement des matières (CEI 61010-2-10:2003, NF EN 61010-2-10:2005)
EMV / EMC / CEM:	
EN 61326-1:2013	Elektrische Mess-, Steuer-, Regel- und Laborgeräte - EMV-Anforderungen - Teil 1: Allgemeine Anforderungen (DIN EN 61326-1:2013, VDE 0813-20-1:2013) Electrical equipment for measurement, control and laboratory use - EMC requirements - Part 1: General requirements (IEC 61326-1:2012, BS EN 61326-1:2013) Matériel électrique de mesure, de commande et de laboratoire - Exigences relatives à la CEM - Partie 1: Exigences générales (CEI 61326-1:2012, NF EN 61326-1:2013)

D-78532 Tuttlingen, 02.06.2014

BINDER GmbH

P. M. Binder
Geschäftsführender Gesellschafter
Managing Director
Directeur général

J. Bollaender
Leiter F & E
Director R & D
Chef de service R&D

EC – declaration of conformity ED

CE

EG – KONFORMITÄTSERKLÄRUNG
EC - DECLARATION OF CONFORMITY
CE - DECLARATION DE CONFORMITE

Anbieter / Supplier / Fournisseur:	BINDER GmbH
Anschrift / Address / Adresse:	Im Mittleren Ösch 5, D-78532 Tuttlingen
Produkt / Product / Produit:	Trocken- und Wärmeschränke mit freier Konvektion Drying and heating ovens with natural convection Etuves universelles à circulation d'air naturelle
Typenbezeichnung / Type / Type:	ED 23, ED 53, ED 115, ED 240, ED 400, ED 720

Die oben beschriebenen Produkte sind konform mit folgenden EG-Richtlinien:
The products described above are in conformity with the following EC guidelines:
Les produits décrits ci-dessus sont conformes aux directives CE suivantes:

Niederspannungsrichtlinie 2006/95/EG Low voltage directive 2006/95/EC Directive basse tension 2006/95/CE	Richtlinie 2006/95/EG des Europäischen Parlaments und des Rates vom 12. Dezember 2006 zur Angleichung der Rechtsvorschriften der Mitgliedstaaten betreffend elektrische Betriebsmittel zur Verwendung innerhalb bestimmter Spannungsgrenzen Council Directive 2006/95/EC of 12 December 2006 on the harmonization of the laws of Member States relating to electrical equipment designed for use within certain voltage limits Directive 2006/95/CE du Parlement Européen et du Conseil du 12 décembre 2006 concernant le rapprochement des législations des États membres relatives au matériel électrique destiné à être employé dans certaines limites de tension
EMV-Richtlinie 2004/108/EG EMC Directive 2004/108/EC Directive CEM 2004/108/CE	Richtlinie 2004/108/EG des Europäischen Parlaments und des Rates vom 15. Dezember 2004 zur Angleichung der Rechtsvorschriften der Mitgliedstaaten über die elektromagnetische Verträglichkeit und zur Aufhebung der Richtlinie 89/336/EWG. Directive 2004/108/EC of the European Parliament and of the Council of 15 December 2004 on the approximation of the laws of the Member States relating to electromagnetic compatibility and repealing Directive 98/336/EEC. Directive 2004/108/CE du Parlement Européen et du Conseil du 15 décembre 2004 relative au rapprochement des législations des États membres concernant la compatibilité électromagnétique et abrogeant le directive 98/336/CEE.

Die oben beschriebenen Produkte tragen entsprechend die Kennzeichnung CE.
The products described above, corresponding to this, bear the CE-mark.
Les produits décrits ci-dessus, en correspondance, portent l'indication CE.

Die oben beschriebenen Produkte sind konform mit folgenden harmonisierten Normen:
The products described above are in conformity with the following harmonized standards:
Les produits décrits ci-dessus sont conformes aux normes harmonisées suivantes:

Sicherheit / safety / sécurité:	
EN 61010-1:2010	Sicherheitsbestimmungen für elektrische Mess-, Steuer-, Regel- und Laborgeräte – Teil 1: Allgemeine Anforderungen (DIN EN 61010-1:2011, VDE 411-1:2011) Safety requirements for electrical equipment for measurement, control, and laboratory use – Part 1: General requirements (IEC 61010-1:2010, BS EN 61010-1:2010) Règles de sécurité pour appareils électriques de mesurage, de régulation et de laboratoire – Partie 1: Prescriptions générales (CEI 61010-1:2010, NF EN 61010:2011)
EN 61010-2-010:2003	Sicherheitsbestimmungen für elektrische Meß-, Steuer-, Regel- und Laborgeräte – Teil 2-010: Besondere Anforderungen an Laborgeräte für das Erhitzen von Stoffen (DIN EN 61010-2-010:2004) Safety requirements for electrical equipment for measurement, control, and laboratory use – Part 2-010: Particular requirements for laboratory equipment for the heating of materials (IEC 61010-2-10:2005, BS EN 61010-2-10:2003) Règles de sécurité pour appareils électriques de mesurage, de régulation et de laboratoire – Partie 2-010 : Prescriptions particulières pour appareils de laboratoire utilisés pour l'échauffement des matières (CEI 61010-2-10:2003, NF EN 61010-2-10:2005)
EMV / EMC / CEM:	
EN 61326-1:2013	Elektrische Mess-, Steuer-, Regel- und Laborgeräte - EMV-Anforderungen - Teil 1: Allgemeine Anforderungen (DIN EN 61326-1:2013, VDE 0813-20-1:2013) Electrical equipment for measurement, control and laboratory use - EMC requirements - Part 1: General requirements (IEC 61326-1:2012, BS EN 61326-1:2013) Matériel électrique de mesure, de commande et de laboratoire - Exigences relatives à la CEM - Partie 1: Exigences générales (CEI 61326-1:2012, NF EN 61326-1:2013)

D-78532 Tuttlingen, 02.06.2014

BINDER GmbH

P. M. Binder
Geschäftsführender Gesellschafter
Managing Director
Directeur général

J. Bollaender
Leiter F & E
Director R & D
Chef de service R&D

EC – declaration of conformity FD

CE

EG – KONFORMITÄTSERKLÄRUNG
EC - DECLARATION OF CONFORMITY
CE - DECLARATION DE CONFORMITE

Anbieter / Supplier / Fournisseur:	BINDER GmbH
Anschrift / Address / Adresse:	Im Mittleren Ösch 5, D-78532 Tuttlingen
Produkt / Product / Produit:	Trocken- und Wärmeschränke mit Umluft Drying and heating ovens with forced convection Etuves de chauffage et de séchage à convection forcée
Typenbezeichnung / Type / Type:	FD 23, FD 53, FD 115, FD 240

Die oben beschriebenen Produkte sind konform mit folgenden EG-Richtlinien:
The products described above are in conformity with the following EC guidelines:
Les produits décrits ci-dessus sont conformes aux directives CE suivantes:

Niederspannungsrichtlinie 2006/95/EG Low voltage directive 2006/95/EC Directive basse tension 2006/95/CE	Richtlinie 2006/95/EG des Europäischen Parlaments und des Rates vom 12. Dezember 2006 zur Angleichung der Rechtsvorschriften der Mitgliedstaaten betreffend elektrische Betriebsmittel zur Verwendung innerhalb bestimmter Spannungsgrenzen Council Directive 2006/95/EC of 12 December 2006 on the harmonization of the laws of Member States relating to electrical equipment designed for use within certain voltage limits Directive 2006/95/CE du Parlement Européen et du Conseil du 12 décembre 2006 concernant le rapprochement des législations des États membres relatives au matériel électrique destiné à être employé dans certaines limites de tension
EMV-Richtlinie 2004/108/EG EMC Directive 2004/108/EC Directive CEM 2004/108/CE	Richtlinie 2004/108/EG des Europäischen Parlaments und des Rates vom 15. Dezember 2004 zur Angleichung der Rechtsvorschriften der Mitgliedstaaten über die elektromagnetische Verträglichkeit und zur Aufhebung der Richtlinie 89/336/EWG. Directive 2004/108/EC of the European Parliament and of the Council of 15 December 2004 on the approximation of the laws of the Member States relating to electromagnetic compatibility and repealing Directive 98/336/EEC. Directive 2004/108/CE du Parlement Européen et du Conseil du 15 décembre 2004 relative au rapprochement des législations des États membres concernant la compatibilité électromagnétique et abrogeant le directive 98/336/CEE.

Die oben beschriebenen Produkte tragen entsprechend die Kennzeichnung CE.
The products described above, corresponding to this, bear the CE-mark.
Les produits décrits ci-dessus, en correspondance, portent l'indication CE.

Die oben beschriebenen Produkte sind konform mit folgenden harmonisierten Normen:
The products described above are in conformity with the following harmonized standards:
Les produits décrits ci-dessus sont conformes aux normes harmonisées suivantes:

Sicherheit / safety / sécurité:	
EN 61010-1:2010	Sicherheitsbestimmungen für elektrische Mess-, Steuer-, Regel- und Laborgeräte – Teil 1: Allgemeine Anforderungen (DIN EN 61010-1:2011, VDE 411-1:2011) Safety requirements for electrical equipment for measurement, control, and laboratory use – Part 1: General requirements (IEC 61010-1:2010, BS EN 61010-1:2010) Règles de sécurité pour appareils électriques de mesurage, de régulation et de laboratoire – Partie 1: Prescriptions générales (CEI 61010-1:2010, NF EN 61010:2011)
EN 61010-2-010:2003	Sicherheitsbestimmungen für elektrische Meß-, Steuer-, Regel- und Laborgeräte – Teil 2-010: Besondere Anforderungen an Laborgeräte für das Erhitzen von Stoffen (DIN EN 61010-2-010:2004) Safety requirements for electrical equipment for measurement, control, and laboratory use – Part 2-010: Particular requirements for laboratory equipment for the heating of materials (IEC 61010-2-10:2005, BS EN 61010-2-10:2003) Règles de sécurité pour appareils électriques de mesurage, de régulation et de laboratoire – Partie 2-010 : Prescriptions particulières pour appareils de laboratoire utilisés pour l'échauffement des matières (CEI 61010-2-10:2003, NF EN 61010-2-10:2005)
EMV / EMC / CEM:	
EN 61326-1:2013	Elektrische Mess-, Steuer-, Regel- und Laborgeräte - EMV-Anforderungen - Teil 1: Allgemeine Anforderungen (DIN EN 61326-1:2013, VDE 0813-20-1:2013) Electrical equipment for measurement, control and laboratory use - EMC requirements - Part 1: General requirements (IEC 61326-1:2012, BS EN 61326-1:2013) Matériel électrique de mesure, de commande et de laboratoire - Exigences relatives à la CEM - Partie 1: Exigences générales (CEI 61326-1:2012, NF EN 61326-1:2013)

D-78532 Tuttlingen, 02.06.2014

BINDER GmbH

P. M. Binder
Geschäftsführender Gesellschafter
Managing Director
Directeur général

J. Bollaender
Leiter F & E
Director R & D
Chef de service R&D

Product registration

Online Product Registration

Register your BINDER now!

www.binder-world.com/register

The registration is free and takes just a few seconds

Advantages:

- Short response times if service is needed
- Fair prices when relocating or installing equipment
- Calibration as required at no charge in case of recalls
- Free information on news, product upgrades and accessories

Easy registered in 3 steps:

1. List serial number here: ☐☐-☐☐☐☐☐
2. Go online: www.binder-world.com/register
3. Register serial number

Content

EC – declaration of conformity BD 2
EC – declaration of conformity ED 4
EC – declaration of conformity FD 6
Product registration 8

1. SAFETY 11

1.1 Legal considerations 11
1.2 Structure of the safety instructions 11
1.2.1 Signal word panel 11
1.2.2 Safety alert symbol 12
1.2.3 Pictograms 12
1.2.4 Word message panel structure 13
1.3 Localization / position of safety labels on the unit 13
1.4 Type plate 14
1.5 General safety instructions on installing and operating the incubators BD and drying and heating ovens ED and FD 15
1.6 Intended use 17
1.6.1 Incubators BD 17
1.6.2 Drying and heating ovens ED and FD 17

2. UNIT DESCRIPTION 18

2.1 Equipment overview BD/ED/FD 19

3. COMPLETENESS OF DELIVERY, TRANSPORTATION, STORAGE, AND INSTALLATION 19

3.1 Unpacking, and checking equipment and completeness of delivery 19
3.2 Guidelines for safe lifting and transportation 20
3.3 Storage 20
3.4 Location of installation and ambient conditions 21

4. INSTALLATION OF THE EQUIPMENT 22

4.1 Electrical connection 22
4.2 Connection to a suction plant (optional) 23

5. START UP 23

5.1 Turning on the unit 23
5.2 Heating operation display 23
5.3 Air change 24

6. OPERATING THE CONTROLLER 24

6.1 Display / entry of temperature set-point (without ramp function) 24
6.2 Display / entry of temperature set-point (with selected temperature ramp) 25
6.3 Time functions: Continuous operation and Timer operation 26
6.3.1 Switching between “Continuous operation” and “Timer operation” 27
6.3.2 Continuous operation 27
6.3.3 Timer operation: Setting the tempering time 28
6.4 User level settings 29
6.4.1 Temperature unit change between degrees Celsius °C and degrees Fahrenheit °F 29
6.4.2 Entering a temperature ramp 30
6.4.3 Chamber addressing 30
6.5 General notes 31

7. TEMPERATURE SAFETY DEVICES 32

7.1 Temperature safety device class 2 (DIN 12880) ED, FD 32
7.2 Temperature safety device class 3.1 (DIN 12880) BD (option ED, FD) 33

8. OPTIONS 35

8.1 Disconnectable audible over-temperature alarm (option) 35
8.2 Communication software APT-COM™ 3 DataControlSystem (option for ED) 35
8.3 Data logger kit (option) 35
8.4 Additional Pt100 temperature sensor (option BD) 36
8.5 Analog output for temperature (option) 36
8.6 Water protected internal socket (option BD) 37

9. MAINTENANCE, CLEANING, AND SERVICE 38

9.1 Maintenance intervals, service 38
9.2 Cleaning and decontamination 38
9.2.1 Cleaning 39
9.2.2 Decontamination 40
9.3 Sending the unit back to BINDER GmbH 41

10. DISPOSAL 42

10.1 Disposal of the transport packing 42
10.2 Decommissioning 42
10.3 Disposal of the unit in the Federal Republic of Germany 42
10.4 Disposal of the unit in the member states of the EC except for the Federal Republic of Germany 43
10.5 Disposal of the unit in non-member states of the EC 44

11. TROUBLESHOOTING 45

12. TECHNICAL DESCRIPTION 46

12.1 Factory calibration and adjustment 46
12.2 Definition of usable volume 46
12.3 Over current protection 46
12.4 BD technical data 47
12.5 ED technical data 48
12.6 FD technical data 50
12.7 Equipment and Options Series BD 52
12.8 Equipment and Options Series ED 53
12.9 Equipment and Options Series FD 54
12.10 Accessories and spare parts 55

13. CONTAMINATION CLEARANCE CERTIFICATE 58

13.1 For units located outside North America and Central America 58
13.2 For units in North America and Central America 61

Dear customer,

For the correct operation of the incubators BD and drying and heating ovens ED and FD, it is important that you read this operating manual completely and carefully and observe all instructions as indicated. Failure to read, understand and follow the instructions may result in personal injury. It can also lead to damage to the unit and/or poor equipment performance.

Understanding and observing the instructions in this operating manual are prerequisites for hazard-free use and safety during operation and maintenance. In no event shall BINDER be held liable for any damages, direct or incidental arising out of or related to the use of this manual.

1. Safety

This operating manual is part of the components of delivery. Always keep it handy for reference. The device should only be operated by laboratory personnel especially trained for this purpose and familiar with all precautionary measures required for working in a laboratory. Observe the national regulations on minimum age of laboratory personnel To avoid injuries and damage observe the safety instructions of the operating manual.

WARNING

Failure to observe the safety instructions.

Serious injuries and unit damage.

- Observe the safety instructions in this operating manual
- Carefully read the complete operating instructions of the incubators BD and drying and heating ovens ED and FD

1.1 Legal considerations

This operating manual is for informational purposes only. It contains information for installing, start-up, operation and maintenance of the product. Note: the contents and the product described are subject to change without notice.

Understanding and observing the instructions in this operating manual are prerequisites for hazard-free use and safety during operation and maintenance. In no event shall BINDER be held liable for any damages, direct or incidental arising out of or related to the use of this manual.

This operating manual cannot cover all conceivable applications. If you would like additional information, or if special problems arise that are not sufficiently addressed in this manual, please ask your dealer or contact us directly by phone at the number located on page one of this manual

Furthermore, we emphasize that the contents of this operating manual are not part of an earlier or existing agreement, description, or legal relationship, nor do they modify such a relationship. All obligations on the part of BINDER derive from the respective purchase contract, which also contains the entire and exclusively valid statement of warranty administration. The statements in this manual neither augment nor restrict the contractual warranty provisions.

1.2 Structure of the safety instructions

In this operating manual, the following safety definitions and symbols indicate dangerous situations following the harmonization of ISO 3864-2 and ANSI Z535.6.

1.2.1 Signal word panel

Depending on the probability of serious consequences, potential dangers are identified with a signal word, the corresponding safety color, and if appropriate, the safety alert symbol.

DANGER

Indicates an imminently hazardous situation that, if not avoided, will result in death or serious (irreversible) injury.

WARNING
Indicates a potentially hazardous situation which, if not avoided, could result in death or serious (irreversible) injury

CAUTION
Indicates a potentially hazardous situation which, if not avoided, may result in moderate or minor (reversible) injury

CAUTION
Indicates a potentially hazardous situation which, if not avoided, may result in damage to the product and/or its functions or of a property in its proximity.

1.2.2 Safety alert symbol

Use of the safety alert symbol indicates a **risk of injury**.
Observe all measures that are marked with the safety alert symbol in order to avoid death or injury.

1.2.3 Pictograms

Warning signs			
Electrical hazard	Hot surface	Explosive atmosphere	Stability hazard
Lifting hazard	Risk of corrosion and / or chemical burns	Harmful substances	Biohazard
Pollution Hazard			
Mandatory action signs			
Mandatory regulation	Read operating instructions	Disconnect the power plug	Lift with several persons
Lift with mechanical assistance	Environment protection	Wear protective gloves	Wear safety goggles

Prohibition signs			
Do NOT touch	Do NOT spray with water		

	Information to be observed in order to ensure optimum function of the product.

1.2.4 Word message panel structure

Type / cause of hazard.

Possible consequences.

∅ Instruction how to avoid the hazard: prohibition.

➢ Instruction how to avoid the hazard: mandatory action.

Observe all other notes and information not necessarily emphasized in the same way, in order to avoid disruptions that could result in direct or indirect injury or property damage.

1.3 Localization / position of safety labels on the unit

The following labels are located on the unit:

Pictograms (Warning signs)	Service label
Hot surface • ED, FD: outer unit door • BD: inner glass door next to the glass door handle • On unit rear next to the exhaust duct	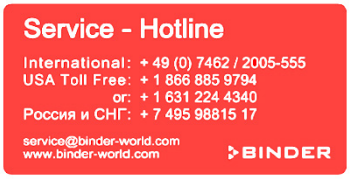
Read operating manual • UL units: outer unit door • BD with optional interior socket: below the interior socket	

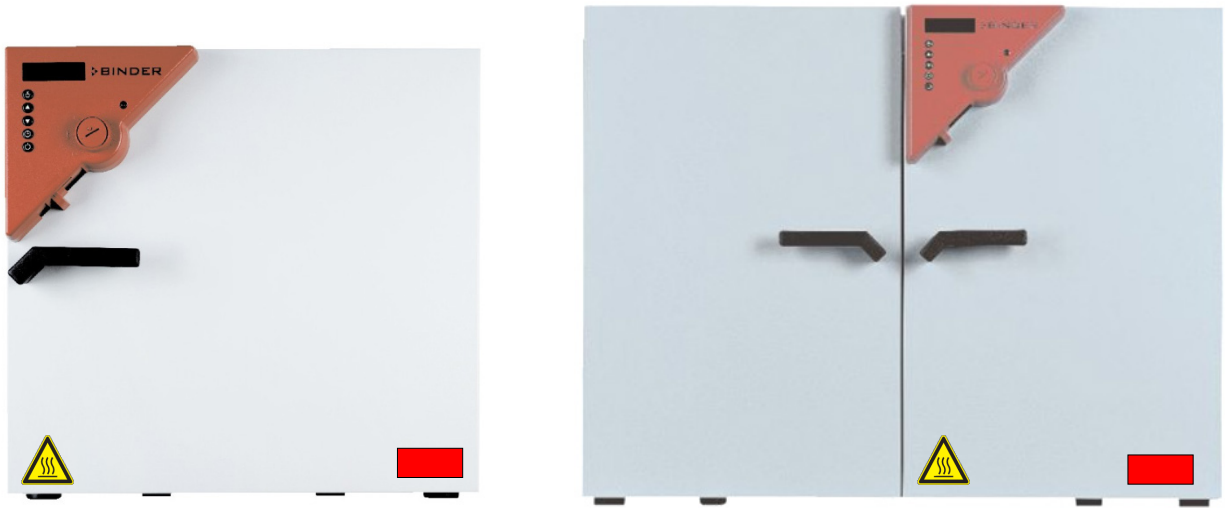

Figure 1: Position of labels on the unit on the front (example: ED, FD)

	Keep safety labels complete and legible.

Replace safety labels that are no longer legible. Contact BINDER Service for these replacements.

1.4 Type plate

The type plate is located on the left-hand side of the unit (size 23) or on the unit front behind the door, bottom left-hand.

Figure 2: Type plate (example: FD 115 regular unit)

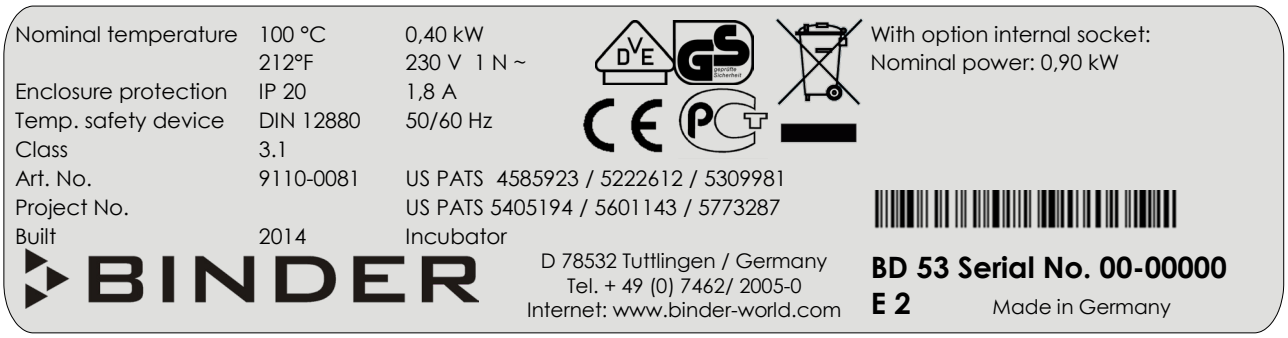

Figure 3: Type plate (example: BD 53 optional unit)

Indications of the type plate (example)		**Information**
BINDER		Manufacturer: BINDER GmbH
FD 115		Model designation
Incubator		Device name: Incubator
Drying and heating oven		Device name: Drying and heating oven
Serial No.	00-00000	Serial No. 00-00000
Built	2014	Year of construction
Nominal temperature	300 °C 572 °F	Nominal temperature
Enclosure protection	IP 20	IP type of protection acc. to EN 60529
Temp. safety device	DIN 12880	Temperature safety device acc. to standard DIN 12880
Class	2.0	Class of temperature safety device
Art. No.	9010-0102	Art. no. of the unit
Project No.	---	Optional: Special application acc. to project no.
1,60 kW		Nominal power
230 V 1 N ~		Nominal voltage ± 10%, phase indication
7,0 A		Nominal current
50/60 Hz		Power frequency
With option internal socket: Nominal power: 0,90 kW		With option internal socket: increased total nominal power

Symbol on the type plate	Information
CE	CE conformity marking
	Electrical and electronic equipment manufactured / placed on the market in the EC after 13 August 2005 and to be disposed of in a separate collection according to directive 2002/96/EC on waste electrical and electronic equipment (WEEE).
DVE GS	VDE-GS certification mark
PCT	The equipment is certified in the GOST R certification system of GOSTSTANDARD Russia.
or EAC	The equipment is certified according to Customs Union Technical Regulation (CU TR) for Russia, Belarus and Kazakhstan.
c UL us LISTED (UL units only)	The equipment is certified by Underwriters Laboratories Inc.® according to standards UL 61010A-1, UL 61010A-2-10, CSA C22.2 No. 1010.1-92, and CSA C22.2 No. 1010.2.010-94.

1.5 General safety instructions on installing and operating the incubators BD and drying and heating ovens ED and FD

With regard to operating the incubators BD and drying and heating ovens ED and FD and to the installation location, please observe the guideline BGI/GUV-I 850-0 on safe working in laboratories (formerly BGR/GUV-R 120 or ZH 1/119 laboratory guidelines issued by the employers' liability insurance association) (for Germany).

BINDER GmbH is only responsible for the safety features of the unit provided skilled electricians or qualified personnel authorized by BINDER perform all maintenance and repair, and if components relating to chamber safety are replaced in the event of failure with original spare parts.

To operate the unit, use only original BINDER accessories or accessories from third-party suppliers authorized by BINDER. The user is responsible for any risk caused by using unauthorized accessories.

CAUTION

Danger of overheating.

Damage to the unit.

∅ Do NOT install the unit in unventilated recesses.

➢ Ensure sufficient ventilation for dispersal of the heat.

Do not operate the incubators BD and drying and heating ovens ED and FD in hazardous locations.

DANGER

Explosion hazard.

Danger of death.

∅ Do NOT operate the unit in potentially explosive areas.

➢ KEEP explosive dust or air-solvent mixtures AWAY from the unit.

The incubators BD and drying and heating ovens ED and FD do not dispose of any measures of explosion protection.

DANGER

Explosion hazard.

Danger of death.

∅ Do NOT introduce any substance into the incubator / drying and heating oven which is combustible or explosive at working temperature.

∅ NO explosive dust or air-solvent mixture in the inner chamber.

Any solvent contained in the charging material must not be explosive or inflammable. I.e., irrespective of the solvent concentration in the steam room, NO explosive mixture with air must form. The temperature inside the chamber must lie below the flash point or below the sublimation point of the charging material. Familiarize yourself with the physical and chemical properties of the charging material, as well as the contained moisture constituent and its behavior with the addition of heat energy.

Familiarize yourself with any potential health risks caused by the charging material, the contained moisture constituent or by reaction products that may arise during the temperature process. Take adequate measures to exclude such risks prior to putting the unit into operation.

DANGER

Electrical hazard.

Danger of death.

∅ The unit must NOT become wet during operation or maintenance.

The incubators BD and drying and heating ovens ED and FD were produced in accordance with VDE regulations and were routinely tested in accordance to VDE 0411-1 (IEC 61010-1).

During and shortly after operation, the temperature of the inner surfaces almost equals the set-point.

CAUTION

The glass doors and glass door handles (BD), inner chamber, exhaust duct, door window (option), and the door gaskets will become hot during operation.

Danger of burning.

∅ Do NOT touch the glass doors, inner surfaces, exhaust duct, door window, access ports, door gaskets, or the charging material during operation.

1.6 Intended use

1.6.1 Incubators BD

The incubators BD are designed for exact temperation of harmless materials. Because of their precise temperature accuracy these devices are especially useful for incubation of cultures at a standard temperature of 37 °C / *98.6 °F*. Any solvent content must not be explosive or flammable. A mixture of any component of the charging material with air must NOT be explosive. The operating temperature must lie below the flash point or below the sublimation point of the charging material.

Other applications are not approved.

The incubators BD are not classified as medical devices as defined by the Medical Device Directive 93/42/EEC.

Do NOT use the unit for drying processes when large quantities of vapor would form and result in condensation.

	Observing the instructions in this operating manual and conducting regular maintenance work (chap. 9) is part of the intended use.

	WARNING: If customer should use a BINDER chamber running in non-supervised continuous operation, we strongly recommend in case of inclusion of irrecoverable specimen or samples to split such specimen or samples and store them in at least two chambers, if this is feasible.

	The charging material shall not contain any corrosive ingredients that may damage the machine components. Such ingredients include in particular acids and halides. Any corrosive damage caused by such ingredients is excluded from liability by BINDER GmbH.

1.6.2 Drying and heating ovens ED and FD

The drying and heating ovens ED and FD are suitable for drying and heat treatment of solid or pulverized charging material, as well as bulk material, using the supply of heat. The solvent content must not be explosive or flammable. A mixture of any component of the charging material with air must NOT be explosive. The operating temperature must lie below the flash point or below the sublimation point of the charging material. The drying and heating ovens ED and FD can be used to dry e.g. glassware.

Other applications are not approved.

The drying and heating ovens ED and FD are not classified as medical devices as defined by the Medical Device Directive 93/42/EEC.

Do NOT use the unit for drying processes when large quantities of vapor would form and result in condensation.

	Due to the special demands of the Medical Device Directive 93/42/EEC, these ovens are not qualified for sterilization of medical devices as defined by the directive.

	Following the instructions in this operating manual and conducting regular maintenance work (chap. 9) are part of the intended use.

	The charging material shall not contain any corrosive ingredients that may damage the machine components. Such ingredients include in particular acids and halides. Any corrosive damage caused by such ingredients is excluded from liability by BINDER GmbH.

2. Unit description

BINDER incubators BD and drying and heating ovens ED and FD are equipped with an electronic PID-controller with digital display.

	The incubators BD indicate the temperature with an accuracy of a tenth of a degree. The drying and heating ovens ED and FD indicate the temperature with an accuracy of one degree.

The incubators BD and the drying and heating ovens ED are heated electrically and are ventilated naturally. Drying and heating ovens FD are ventilated by fan-assisted, forced-air circulation.

The APT.line™ preheating chamber system guarantees high level of spatial and time-based temperature precision, thanks to the direct and distributed air circulation into the interior. With FD, the fan supports exact attainment and maintenance of the desired temperature accuracy.

BINDER incubators BD and drying and heating ovens ED and FD are regularly equipped with a temperature safety device according to DIN12880 (chap. 7).

The inner chamber, the pre-heating chamber and the inside of the doors are all made of stainless steel V2A (German material no. 1.4301, US equivalent AISI 304). When operating the drying and heating ovens ED and FD at temperatures above 150 °C / *302 °F*, the impact of the oxygen in the air may cause discoloration of the metallic surfaces (yellowish-brown or blue) by natural oxidation processes. These colorations are harmless and will in no way impair the function or quality of the unit. The housing is RAL 7035 powder-coated. All corners and edges are also completely coated.

All unit functions are easy and comfortable to use thanks to their clear arrangement. Major features are easy cleaning of all unit parts and avoidance of undesired contamination.

BINDER incubators BD and drying and heating ovens ED (option) are equipped with a serial interface RS 422 for computer communication, e.g. via the communication software APT-COM™ 3 DataControlSystem (option, chap. 8.2). For further options, see chap. 12.7 to 12.9.

The models size 720 are equipped with four castors. Both front castors can be locked by brakes.

Temperature range at an ambient temperature of +18 °C up to +40 °C / *64.4 °F to 104 °F.*

- Incubators BD: 5 °C / *9 °F* above room temperature up to 100 °C / *212 °F*.
- Drying and heating ovens ED and FD: 5 °C / *9 °F* above room temperature up to 300 °C / *572 °F*.

2.1 Equipment overview BD/ED/FD

(1) Display
(2) Set-point value key
(3) Selector keys
(4) Time management key
(5) Switch ON/OFF
(6) Lever for ventilation slide
(7) Safety device
(8) Door handle
(9) **BD:** ON/OFF switch for internal socket (option)
ED / FD: Switch for interior lighting (option) **or** buzzer switch for audible over-temperature alarm (option)
(10) **BD:** Buzzer switch for audible over-temperature alarm (option)
ED: Main power switch with sizes 400 and 720

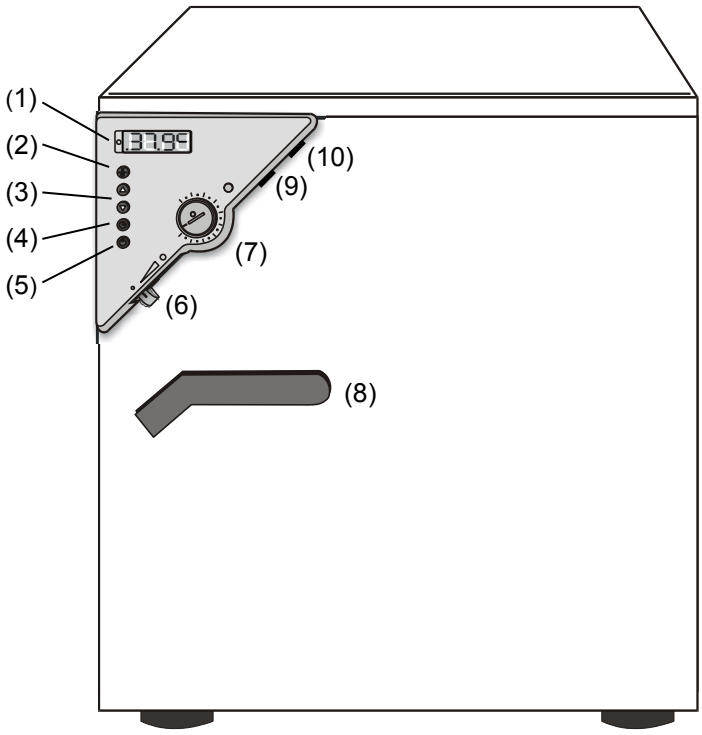

Figure 4: Overview BD / ED / FD

3. Completeness of delivery, transportation, storage, and installation

3.1 Unpacking, and checking equipment and completeness of delivery

After unpacking, please check the unit and its optional accessories, if any, based on the delivery receipt for completeness and for transportation damage. Inform the carrier immediately if transportation damage has occurred.

The final tests of the manufacturer may have caused traces of the racks on the inner surfaces. This has no impact on the function and performance of the unit.

Please remove any transportation protection devices and adhesives in/on the unit and on the doors and take out the operating manuals and accessory equipment.

CAUTION

Sliding or tilting of the unit.
Damage to the unit.
Risk of injury by lifting heavy loads.

∅ Do NOT lift or transport the unit using the door handle or the door.
∅ Do NOT lift units size 400 and 720 by hand
➢ Lift the unit size 23, 53, 115 from the pallet at its four lower corners with the aid of 2 people, unit size 240 with the aid of 4 people.
➢ Lift units size 400 and 720 from the pallet using technical devices (fork lifter). Set the fork lifter only from the rear in the middle of the unit. Make sure to place all the lateral supports of the unit on the forks.

If you need to return the unit, please use the original packing and observe the guidelines for safe lifting and transportation (chap. 3.2).

For disposal of the transport packing, see chap. 10.1.

Note on second-hand units (Ex-Demo-Units):

Second-hand units are units that have been used for a short time for tests or exhibitions. They are thoroughly tested before resale. BINDER ensures that the chamber is technically sound and will work flawlessly.

Second-hand units are marked with a sticker on the unit door. Please remove the sticker before commissioning the unit.

3.2 Guidelines for safe lifting and transportation

The front castors of units size 720 can be blocked by brakes. Please move the units with castors only when empty and on an even surface, otherwise the castors may be damaged. After operation please observe the guidelines for temporarily decommissioning the unit (chap. 10.2).

CAUTION

Sliding or tilting of the unit.

Damage to the unit.

Risk of injury by lifting heavy loads.

- ➢ Transport the unit only in its original packaging.
- ➢ Secure the unit with transport straps for transport.
- ∅ Do NOT lift or transport the unit using the door handle or the door.
- ∅ Do NOT lift units size 400 and 720 by hand.
- ➢ Lift unit size 23, 53, 115 at its four lower corners with the aid of 2 people, unit size 240 with the aid of 4 people, and place it on a transport pallet with wheels. Push the pallet to the desired site and then lift the unit from the pallet at its four lower corners.
- ➢ Place units size 400 and 720 using technical devices (fork lifter) on the transport pallet. Set the fork lifter only from the rear in the middle of the unit. Make sure to place all the lateral supports of the unit on the forks.
- ➢ Transport units size 400 and 720 ONLY with the original transport pallet. Set the fork lifter only to the pallet. Without the pallet the unit is in imminent danger of overturning!!

- Permissible ambient temperature range during transport: -10 °C to +60 °C / *14 °F to 140 °F.*

You can order transport packing and pallets for transportation purposes from BINDER Service.

3.3 Storage

Intermediate storage of the unit is possible in a closed and dry room. Observe the guidelines for temporary decommissioning (chap. 10.2).

- Permissible ambient temperature range during storage: -10 °C to +60 °C / *14 °F to 140 °F.*
- Permissible ambient humidity: max. 70 % r.H., non-condensing

When after storage in a cold location you transfer the unit to its warmer installation site, condensation may form. Before start-up, wait at least one hour until the unit has attained ambient temperature and is completely dry.

3.4 Location of installation and ambient conditions

Set up the incubators BD or the drying and heating ovens ED / FD on an even and non-flammable surface, free from vibration and in a well-ventilated, dry location and align it using a spirit level. The site of installation must be capable of supporting the unit's weight (see technical data, chap. 12.4 to 12.6). The chambers are designed for setting up inside a building (indoor use).

CAUTION

Danger of overheating.

Damage to the unit.

∅ Do NOT set up units in non-ventilated recesses.

➢ Ensure sufficient ventilation for dispersal of the heat.

- Permissible ambient temperature range during operation: +18 °C up to +40 °C / *64.4 °F to 104 °F.*
- At elevated ambient temperature values, fluctuations in temperature can occur.

The ambient temperature should not be substantially higher than the indicated ambient temperature of +25 °C / *77 °F* to which the specified technical data relate. For other ambient conditions, deviations from the indicated data are possible.

- Permissible ambient humidity: 70 % r.H. max., non-condensing.
- Installation height: max. 2000 m / *6562 ft.* above sea level.

When placing several units of the same size side by side, maintain a minimum distance of 250 mm / *9.84 in* between each unit. Wall distances: rear 100 mm / *3.94 in*, sides 160 mm / *6.30 in*. Spacing above the unit of at least 100 mm / *3.94 in* must also be accounted for.

Two devices up to size 115 can be stacked on top of each other. For this purpose place rubber pads under all four feet of the upper unit to prevent the device from slipping.

CAUTION

Sliding or tilting of the upper unit.

Damage to the units.

➢ When stacking, place rubber pads under all four feet of the upper unit.

To completely separate the unit from the power supply, you must disconnect the power plug. Install the unit in a way that the power plug is easily accessible and can be easily pulled in case of danger.

Do not install or operate the unit in potentially explosive areas.

DANGER

Explosion hazard.

Danger of death.

∅ Do NOT operate the unit in potentially explosive areas.

➢ KEEP explosive dust or air-solvent mixtures AWAY from the vicinity of the unit.

4. Installation of the equipment

4.1 Electrical connection

The incubators BD and drying and heating ovens ED / FD are supplied ready for connection

- **BD all volumes, ED up to volume 240, FD all volumes:**

  Shockproof plug, power supply voltage 230 V (1N~) +/- 10 %, 50/60 Hz

  Fixed power connection cable of 1800 mm in length

- **ED 400, ED 720:**

  CEE plug 5 poles, power supply voltage 400 V (3N~) +/- 10 %, 50/60 Hz

  Fixed power connection cable of 2700 mm in length

- **BD-UL 23, BD-UL 53, BD-UL 115, BD-UL 240, BD-UL 400, ED 23-UL, FD 23-UL:**

  NEMA plug 5-15P, power supply voltage 115 V (1N~) +/- 10 %, 60 Hz

  Fixed power connection cable of 1800 mm in length

- **BD 720-UL, ED 53-UL, ED 115-UL, FD 53-UL, FD 115-UL:**

  NEMA plug 5-20P, power supply voltage 115 V (1N~) +/- 10 %, 60 Hz

  Fixed power connection cable of 1800 mm in length

- **ED 240-UL, ED 400-UL, ED 720-UL, FD 240-UL:**

  NEMA plug L21-20P, power supply voltage 208 V (3N~) +/- 10 %, 60 Hz

  Fixed power connection cable of 2700 mm in length

- The socket must also provide a protective conductor.
- Prior to connection and start-up, check the power supply voltage. Compare the values to the specified data located on the unit's type plate (unit front behind the door bottom left-hand, or on the left-hand side of the unit, chap. 1.4). We recommend the use of a residual current circuit breaker.
- When connecting, please observe the regulations specified by the local electricity supply company and as well as the VDE directives (for Germany)
- Pollution degree (acc. to IEC 61010-1): 2
- Over-voltage category (acc. to IEC 61010-1): II

	CAUTION
	Danger of incorrect power supply voltage. Damage to the equipment. ➢ Check the power supply voltage before connection and start-up. ➢ Compare the power supply voltage with the data indicated on the type plate.

See also electrical data (chap. 12.4 to 12.6).

	To completely separate the unit from the power supply, you must disconnect the power plug. Install the unit in a way that the power plug is easily accessible and can be easily pulled in case of danger.

4.2 Connection to a suction plant (optional)

When directly connecting a suction plant the spatial temperature exactitude, the heating-up and the recovering times and the maximum temperature will be negatively influenced. So no suction plant should be directly connected to the exhaust duct.

	Active suction from the chamber must only be effected together with extraneous air. Perforate the connecting piece to the suction device or place an exhaust funnel at some distance to the exhaust duct.

	CAUTION
	The exhaust duct will become hot during operation. **Danger of burning.** ∅ Do NOT touch the exhaust duct during operation.

5. Start up

5.1 Turning on the unit

	Warming chambers may release odors in the first few days after commissioning. This is not a quality defect. To reduce odors quickly we recommend heating up the chamber to its nominal temperature for one day and in a well-ventilated location.

1. Insert the plug into a suitable socket (chap. 4.1).
2. Turn on ED units sizes 400 and 720 at the main power switch (10)

   The green “Standby“ LED illuminates

3. Press until the display lights up.

The controller is now in normal display (actual value display).

If the chamber is operating (time functions “Continuous operation”, or “Timer operation” with the set time just running down chap. 6.3), the **actual temperature value** (example: 22 °C) is displayed

If the controller is in time function “Timer operation” with no time programmed or the set time run-off (chap. 6.3), the unit is inactive (no heating). The display alternately shows the **actual temperature value** (example: 22 °C) and “**tOff**”:

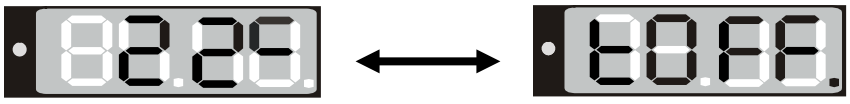

	Adjust the safety device following any changes of the set-point (chap. 7).

5.2 Heating operation display

The heating and fan (with FD) are active as soon as the red heating control light in the bottom right corner of the display slowly begins to flash depending on the heat requirement (example: 70 °C).

5.3 Air change

Opening the air flap in the exhaust duct serves to adjust the air change.

Without connecting a suction plant:

- For BD and ED units fresh air circulation can be elevated using the exhaust duct. The air flap in the exhaust duct serves to adjust the fresh air entry.
- For FD units with the air flap open and the fan operating, fresh air comes in via aeration gaps.
- If the air flap is completely open, the spatial temperature accuracy can be negatively influenced.

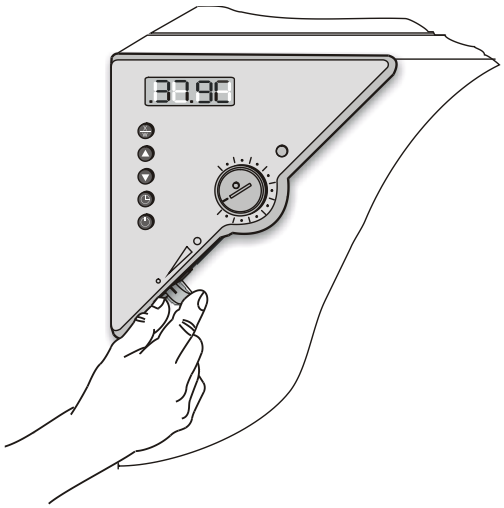

Figure 5: Adjusting the air flap

6. Operating the controller

Controller setting is identical with all three chambers BD, ED, and FD. The temperature controllers only differ in their temperature range (BD: up to 100 °C / *212 °F*, ED/FD: up to 300 °C / *572 °F*) and the displayed accuracy (BD: a tenth of a degree, ED/FD: one degree).

6.1 Display / entry of temperature set-point (without ramp function)

The unit is operating, the controller is in normal display (actual value display). The actual temperature value (example: 22 °C) is displayed:

1. Press button

   The display shows alternately "**SP**" and the previous **temperature set-point** (example: 60 °C):

2. With the buttons enter a set-point value between 0 and 300.

	The desired temperature set-point can be selected in a temperature range from 5 °C / *9 °F* above room temperature up to 100 °C / *212 °F* (BD) or 300 °C / *572 °F* (ED/FD).

3. Wait 2 seconds until the entered temperature value is taken over (display flashing once).

4. Press button to return to normal display (actual value display) (automatically after approx. 30 seconds).

	Adjust the safety device following any changes of the set-point (chap. 7).

6.2 Display / entry of temperature set-point (with selected temperature ramp)

If previously a temperature ramp value has been selected (chap. 6.4.2):

Press button X/W in normal display / actual value display during ramp operation to have displayed the actual temperature ramp set-point, which changes according to the selected gradient, in addition to the entered target set-point for temperature.

The chamber is operating, the controller is in normal display (actual value display). The **actual temperature value** (example: 22 °C) is displayed:

1. Press X/W button

   The display shows alternately "**SPr**" and the **actual temperature ramp set-point** changing according to the selected gradient (example: 42 °C):

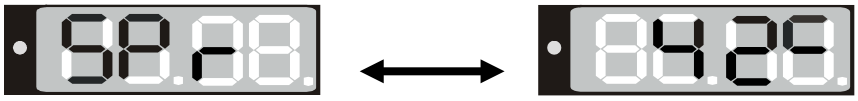

   This ramp set-point is displayed only, it is not adjustable.

2. Press X/W button

   The display shows alternately "**SP**" and the previous **temperature set-point** (example: 60 °C):

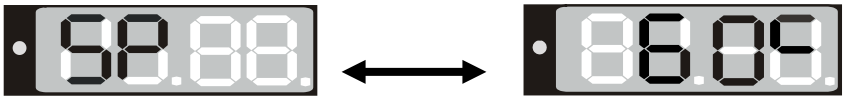

3. With the ▼ ▲ buttons enter a set-point value between 0 and 300.

	The desired temperature set-point can be selected in a temperature range from 5 °C / *9 °F* above room temperature up to 100 °C / *212 °F* (BD) or 300 °C / *572 °F* (ED/FD).

4. Wait 2 seconds until the entered temperature value is taken over (display flashing once).

5. Press X/W button to return to normal display / actual value display (automatically after approx. 30 seconds).

	Adjust the safety device following any changes of the set-point (chap. 7).

6.3 Time functions: Continuous operation and Timer operation

Press the time management button .

The timer indicates its current time function. There are two possible time functions:

Continuous operation

The display shows alternately "**t1**" (time function) and the time function "Continuous operation" "**t inf**":

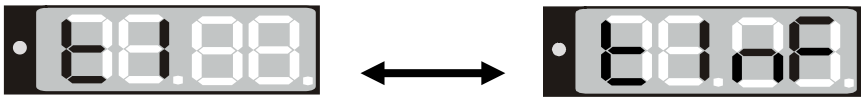

The heating and fan (with FD) are permanently active, independent of the timer setting.

Timer operation

The display shows alternately "**t1**" (time function) and the running-down **time** or "**tOff**":

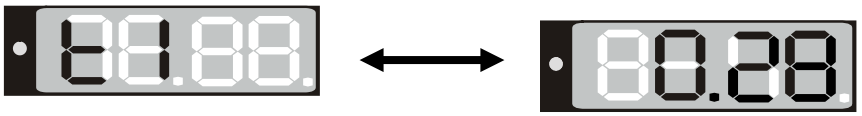

or

Remaining time (example: 28 Min.) **– Timer running down**

Heating and fan (with FD) are active until the timer has run-down.

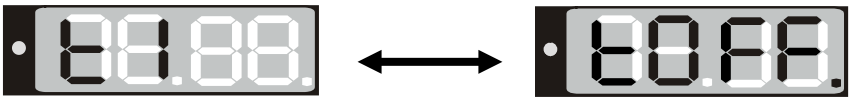

Timer not programmed or run-down "t off"

If the timer has run-down, heating and fan (with FD) are permanently off.

Press button to return to normal display (actual value display) (automatically after approx. 30 seconds).

6.3.1 Switching between “Continuous operation” and “Timer operation”

Press the time management button .

The controller displays the actual time function. In time function “Continuous operation”, “t1” and “t inf” are displayed alternately. In time function “Timer operation”, “t1” is displayed alternately with the running-down time or “tOff”.

If in time function “Timer operation” the Timer is just running off (“t1”displayed alternately with the running-down time) the timer must first be set to Zero (chap. 6.3.3). Now “t1” is displayed alternately with “tOff”, and the controller can be changed to time function “Continuous operation”.

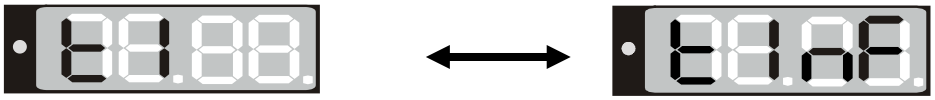

Continuous operation

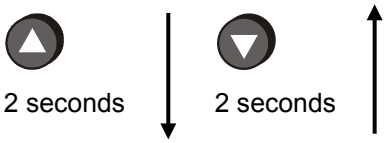

2 seconds 2 seconds

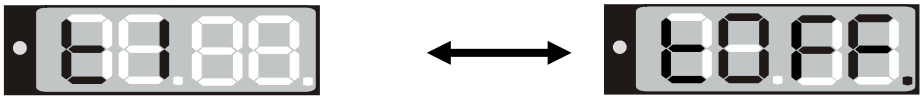

Timer operation Timer not programmed or run-down

Press button to return to normal display / actual value display (automatically after approx. 30 sec).

6.3.2 Continuous operation

1. Press the time management button .The timer indicates its current time function.
2. If necessary, switch to timer operation by button .
   The display shows alternately “**t1**” and the time function “Continuous operation” “**t inf**”:

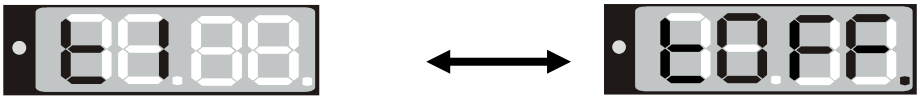

3. Press button to return to normal display (actual value display) (automatically after approx. 30 seconds).

The **actual temperature value** (example: 22 °C) is displayed:

Now the controller operates with the entered set-point (chap. 6.1) in continuous operation. The heating and fan (for FD) are permanently active, independent of the timer setting.

To cancel Continuous operation, proceed accordingly:

1. Press the time management button .
2. Switch to Timer operation by pressing down button for 2 seconds (chap. 6.3.1).

6.3.3 Timer operation: Setting the tempering time

1. Press the time management button . The controller indicates its current time function.
2. If necessary, switch to timer operation by button .

   The display alternately shows"**t1**" and the running-down **time** or "**tOff**":

or

Remaining time (example: 28 minutes) – **Timer running down**

Timer not programmed or run-off "t off"

3. Set the desired time [hh.mm] with buttons .
4. Wait 2 seconds until the entered temperature value is taken over (display flashing once).

   The display alternately shows "**t1**" and the set time now running down.

The time directly begins to run off after taking-over of the entered value. Heating and fan (with FD) are active until the timer has run-down.

5. Press button to return to normal display (actual value display) (automatically after approx. 30 seconds).

The **actual temperature value** is displayed (example: 22 °C):

The controller operates with the entered set-points (chap. 6.1) until run-down of the set time. Heating and fan (with FD) are active until the timer has run-down.

To know the remaining timer time or, if appropriate, to modify it, press the time management button in normal display (actual value display).

The display alternately shows "**t1**" and the running-down **time**:

After the set time has run down the display alternately shows the **actual temperature value** (example: 22 °C) and "**tOff**":

Now the heating and fan (with FD) are inactive.

6.4 User level settings

By pressing down button X/W in normal display (actual value display) for 5 sec, you enter the user menu. Settings in this menu affect controller operation.

User level overview:

Press down button X/W for approx. 5 seconds

↓

Select the **temperature unit** (chap. 6.4.1)

↓

Press X/W button

↓

Ramp function (chap. 6.4.2)

↓

Press X/W button

↓

Setting the **unit address** (chap. 6.4.3)

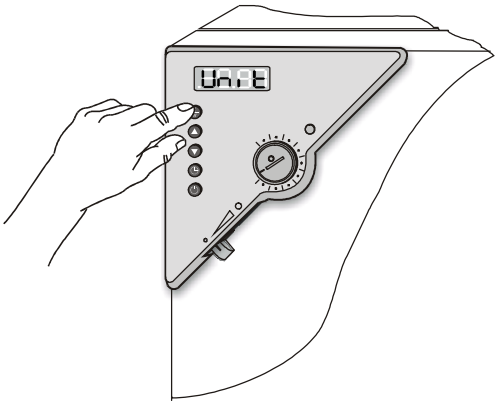

Figure 6: Press down X/W button for approx. 5 seconds

Press button X/W to return to normal display with display of the temperature set-point. **Or:**

After approx. 30 seconds the controller automatically returns to normal display / actual value display.

All settings can be carried out independently (as described in he individuel sections) or one after the other during one single process.

☞	The defined parameters are not deleted when the main power switch is turned off or in case of power failure.

6.4.1 Temperature unit change between degrees Celsius °C and degrees Fahrenheit °F

If required, the temperature display can be changed as follows:

1. Press down X/W button for approx. 5 seconds.

The display alternately shows "**unit**" and the actual setting of the **temperature unit**:

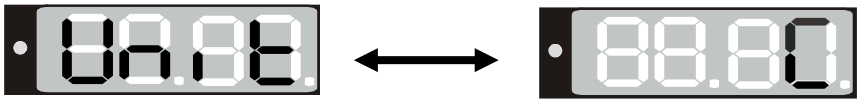

2. Use the ▼ ▲ buttons to set the required unit.

3. The set unit is automatically adopted after 2 seconds.

☞	C = degrees Celsius	0 °C = 31 °F	Conversion:
	F= degrees Fahrenheit	100 °C = 212 °F	[Value in °F] = [Value in °C] ∗ 1.8 + 32

When specifying the set point ramp (see chap. 6.4.2) this setting is accordingly taken as the basis.

☞	If the unit is changed, the temperature set-point and limits are converted accordingly.

6.4.2 Entering a temperature ramp

You can program temperature ramps in order to extend heating up times. This may be necessary in some cases to prevent temperature stresses in the material during the heating up phase. Temperature ramps should only be used if required. Using them may result in considerably slowing down the heating up times.

The entry in °C/min or in °F/min means the nominal value gradient and limits the maximum temperature increase to this value. Due to the heat and evaporation energy assumed by the drying material, smaller temperature gradients may also result.

A temperature ramp proceeds from a previously entered set-point to a new one. The temperature must be equilibrated to the start set-point. Perform the setting in the following 3 steps:

1. Enter the set-point of the ramp start temperature. Let the temperature equilibrate to this value.
2. Set the ramp to the desired gradient. You can select a gradient from 0.0 °C/min up to 1.0 °C/min (BD), resp. from 1 °C/min up to 10 °C/min (ED, FD).

   A heating-up rate of 0.4 °C/min (BD) resp. 4 °C/min (ED, FD) can be regarded as a realistic maximum.
3. Enter the set-point (target ramp temperature).

Set a ramp gradient only if required. The setting “0” means “ramp function turned off”. The unit will heat up with its maximum heating capacity.

1. Press down button for approx. 5 seconds.

The display alternately shows “unit” and the temperature unit:

2. Press again button .

The display alternately shows “**rASd**” and the actual setting of the **set-point gradient**:

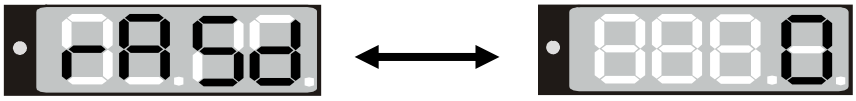

3. Set the desired ramp gradient with buttons (set-point gradient in °F or °C acc. to the selected setting, see chap. 6.4.1).
4. The set value is automatically adopted after 2 seconds.

During ramp operation the actual set-point (SPr) continually rises in accordance to the entered gradient from the previously entered set-point to the new one (SP). The actual value follows he set-point value.

About set-point display during ramp operation see chap. 6.2.

6.4.3 Chamber addressing

If several incubators BD or drying and heating ovens ED (option) are networked with a PC via the APT-COM communication software (option, chap. 8.2), each unit must be allocated a unique address. Addressing takes place on the chamber controller as follows:

1. Press down (X/W) button for approx. 5 seconds.

   The display alternately shows “unit” and the temperature unit:

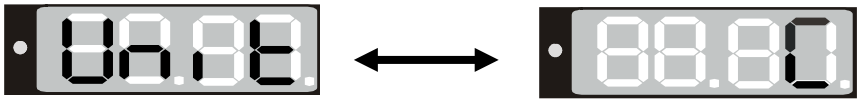

2. Press again button (X/W) .

   The display alternately shows “rASd” and the set-point gradient:

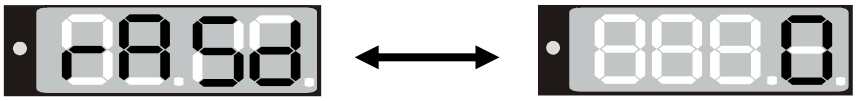

3. Press again button (X/W) .

   The display alternately shows “**Adr**” and the actual setting of the **unit address**:

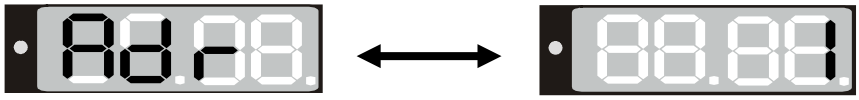

4. Set the required address with buttons (▼) (▲) .

	You can enter address values between 1 and 30.

5. The set value is automatically adopted after 2 seconds.

6.5 General notes

	Approx. 30 sec. after the last entry the controller returns to normal display (actual value display).

	The functions set-point entry (chap. 6.1), time functions (chap. 6.3), and calling up the user menu (chap. 6.4) can only be selected from normal display (actual value display).

	When selecting the functions set-point entry and time functions, and when selecting the user menu functions, the respective button (X/W) or (◷) must be pressed down for a about 1 sec. Shorter pressing will be ignored by the controller.

	After a power failure, the timer returns to the previous status. A remaining time, if any, will continue running down.

	Adjust the safety device following any changes of the set-point (chap. 7).

7. Temperature safety devices

7.1 Temperature safety device class 2 (DIN 12880) ED, FD

The temperature safety device class 2 protects the chamber, its environment and the charging material from exceeding the maximum permissible temperature.

Please observe the guideline BGI/GUV-I 850-0 on safe working in laboratories (formerly BGR/GUV-R 120 or ZH 1/119 laboratory guidelines issued by the employers' liability insurance association) (for Germany).

In the event of a fault in the temperature controller, the safety device (7) **permanently** turns off the chamber. This status is reported visually by the indicator lamp (7a) and, in case of the option audible alarm with activated buzzer (chap. 8.1), by the buzzer sounding.

Check the operation of the safety device (7) by moving it slowly counter-clockwise until the chamber turns off. The safety device cut-off is reported visually by the indicator lamp (7a) and, in case of the option audible alarm with activated buzzer (chap. 8.1), by the buzzer sounding.

Then release again the safety device by pressing the reset button (7b) and turn on the chamber as described.

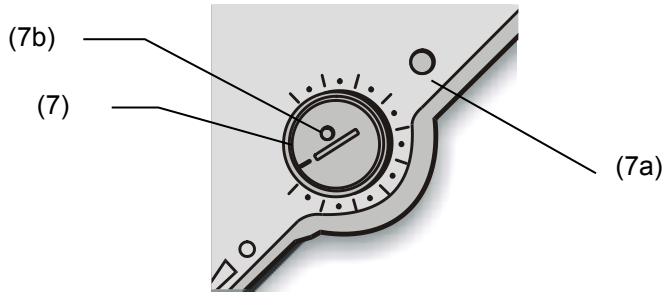

Figure 7: Temperature safety device class 2

Function:

The safety device class 2 is functionally and electrically independent of the temperature control device and turns off the chamber permanently.

If you turn the control knob (7) to its end-stop (position 10), the safety device protects the appliance. If you set it to a temperature a little above the controller's set-point temperature, it protects the charging material.

If the safety device has turned off the chamber, identifiable by the red alarm lamp (7a) lighting up and, in case of the option audible alarm with activated buzzer (chap. 8.1), by the buzzer sounding, proceed as follows:

- Disconnect the chamber from the power supply.
- Have an expert examine and rectify the cause of the fault.
- Release the safety device by pressing the reset button (7b).
- Restart the chamber as described in chap. 5.

Setting:

To check the response temperature of the safety device, turn on the chamber and set the desired set-point at the temperature controller.

The scale division from 1 to 10 corresponds to the temperature range from 30 °C / *86 °F* up to 320 °C / *608 °F* and serves as a setting aid.

1. Turn the control knob (7) of the safety device using a coin to its end-stop (position 10) (chamber protection).
2. When the set point is reached, turn back the control knob (7) until its trip point (turn it counter-clockwise).
3. The trip point is identifiable by the red alarm lamp (7a) lighting up; the reset button (7b) pops out.

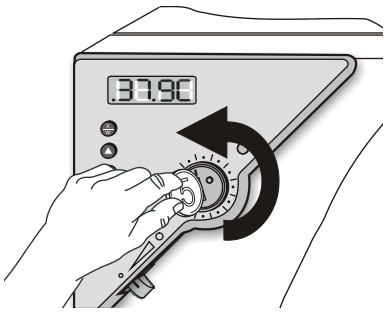

With the option audible alarm and the buzzer activated (chap. 8.1), the buzzer sounds as an additional signal. You can turn it off with switch (10) resp. (9).

4. The optimum setting of the safety device is obtained by turning the control knob clockwise by approx. one graduation mark on the scale.
5. Push the reset button (7b) in again.

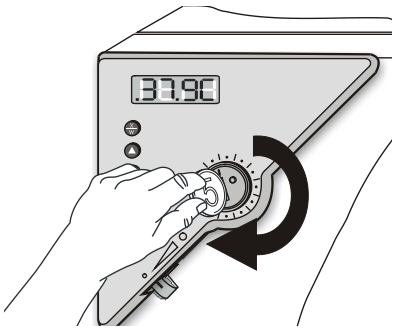

	The chamber is only active with the reset button (7b) pushed in.

When the safety device class 2 responds, the red alarm lamp (7a) lights up, the reset button (7b) pops out, and the chamber turns off permanently.

	Check the setting regularly and adjust it following any changes of the set-point.

Function check:

Check the temperature safety device class 2 at appropriate intervals for its functionality. It is recommended that the authorized operating personnel should perform such a check, e.g., before starting a longer work procedure.

7.2 Temperature safety device class 3.1 (DIN 12880) BD (option ED, FD)

The temperature safety device class 3.1 serves to protect the incubator, its environment and the charging material from exceeding the maximum permissible temperature.

Please observe the guideline BGI/GUV-I 850-0 on safe working in laboratories (formerly BGR/GUV-R 120 or ZH 1/119 laboratory guidelines issued by the employers' liability insurance association) (for Germany).

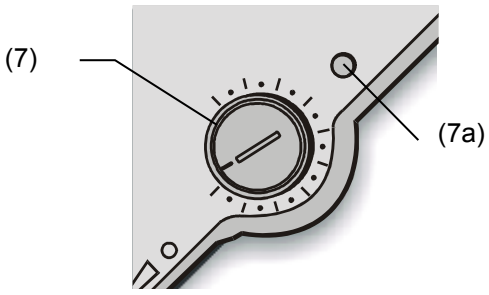

Figure 8: Temperature safety device class 3.1

Function:

The temperature safety device is functionally and electrically independent of the temperature control system and if an error occurs it performs a regulatory function.

If you turn the control knob (7) to its end-stop (position 10), the safety device class 3.1 protects the chamber. If you set it to a temperature a little above the controller's set-point temperature, it protects the charging material.

If the safety device has taken over control (identifiable by the red alarm lamp (7a) lighting up and, in case of the option audible alarm with activated buzzer (chap. 8.1), by the buzzer sounding), proceed as follows:

- Disconnect the unit from the power supply.
- Have an expert examine and rectify the cause of the fault.
- Restart the unit (see chapter 5).

Adjustment:

To check the response temperature of the safety thermostat class 3.1, turn on the chamber and set the desired set point on the temperature controller.

The sections of the scale from 1 to 10 correspond to the temperature range from 0 °C / *32 °F* to 120 °C / *248 °F* (BD) or from 63 °C / *145.4 °F* to 350 °C / *662 °F* (ED or FD, option) and serve as a setting aid.

1. Turn the control knob (7) of the safety device with a coin to its end-stop (chamber protection).
2. When the set point is reached, turn back the control knob (7) until its trip point (turn it counter-clockwise)
3. The trip point is identifiable by the red alarm lamp (7a) lighting up.

   With the option audible alarm and the buzzer activated (chap. 8.1), the buzzer sounds as an additional signal. You can turn it off with switch (10) resp. (9).
4. The optimum setting of the safety device is obtained by turning the control knob clockwise by approx. one scale division, which leads to extinguish the red alarm lamp (7a).

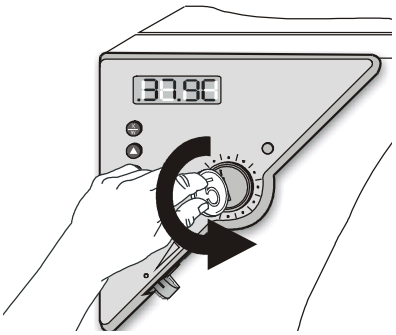

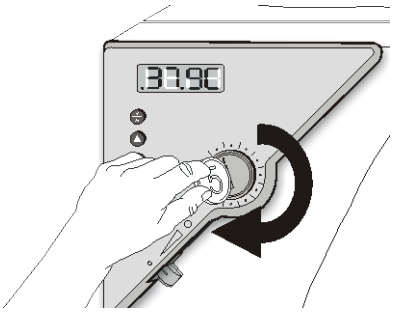

	Check the setting regularly and adjust it following any changes of the set-point.

Function check:

Check the temperature safety device class 3.1 at appropriate intervals for its functionality. It is recommended that the authorized operating personnel should perform such a check, e.g., before starting a longer work procedure.

8. Options

8.1 Disconnectable audible over-temperature alarm (option)

This option permits activating an audible signal with the buzzer switch (10) (BD) resp. (9) (ED / FD).

Position 0 = buzzer off

Position 1 = buzzer active

If the buzzer is activated, an audible signal sounds when the limit temperature set at the temperature safety device class 2 (chap. 7.1) or class 3.1 (chap. 7.2) is exceeded, this happens in addition to the red alarm pilot lamp (7a) lighting up. The buzzer can be turned off using the buzzer switch (10) resp. (9).

	Turning off the audible alarm does not influence the safety device's regulatory or turning off function. Proceed as described in chap. 7.1 / 7.2.

8.2 Communication software APT-COM™ 3 DataControlSystem (option for ED)

The chamber is regularly (BD) or optionally (ED) equipped with a serial interface RS 422 that can connect the BINDER communication software APT-COM™ 3 DataControlSystem. The connection to a computer is established using the unit interface via an interface converter RS 422 / RS 232.

The actual temperature values are given at adjustable intervals. Programming can be performed graphically via PC. Up to 30 chambers with RS 422 interface can be cross linked. For further information, refer to the operating manual of the BINDER communication software APT-COM™.

Pin allocation of the RS 422 interface:

pin 2:	RxD (+)
pin 3:	TxD (+)
pin 4:	RxD (-)
pin 5:	TxD (-)
pin 7:	Ground

	If several incubators BD or drying and heating ovens ED (option) are to be recorded via a PC, each one must be allocated a unique address. Addressing is performed via the chamber controller (see chap. 6.4.3).

8.3 Data logger kit (option)

BINDER Data Logger Kits offer an independent long-term measuring system for temperature. They are equipped with a keyboard and a large LCD display, alarm functions and a real-time function. Measurement data are recorded in the Data Logger and can be read out after the measurement via the RS232 interface of the Data Logger. It offers a programmable measuring interval and permits storing up to 64000 measuring values. Reading out is done with the Data Logger evaluation software. You can give out a combined alarm and status protocol directly to a serial printer.

For BD: Data Logger Kit T 220: Temperature range -90 °C / *-130 °F* up to +220 °C / *428 °F*

For ED/FD: Data Logger Kit T 350: Temperature range 0 °C / 32 *°F* up to +350 °C / 662 *°F*

	For detailed information on installation and operation of the BINDER Data Logger, please refer to the mounting instructions Art. No. 7001-0204 and to the original user manual of the manufacturer, supplied with the data logger.

8.4 Additional Pt100 temperature sensor (option BD)

An additional fixed or flexible temperature sensor Pt100 permits measuring the chamber temperature (fixed Pt100) or the temperature of the charging material (flexible Pt100) by means of an independent measuring system with Pt100 entry. The sensor top protective tube of the flexible Pt100 can be immersed into liquid substances.

Technical data of thePt100 sensor:

- Three-wire technique
- Class B (DIN EN 60751)
- Temperature range up to 320 °C / *608 °F*
- Stainless steel protective tube 45 mm length material no. 1.4501

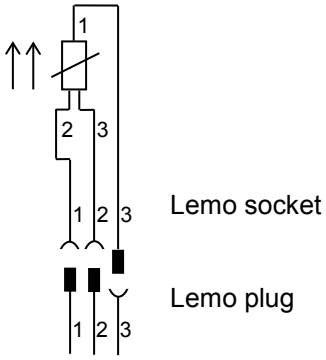

Figure 9: Option temperature sensor Pt100

8.5 Analog output for temperature (option)

With this option the chamber is equipped with an analog output 4-20 mA for temperature. This output permits transmitting data to external data registration systems or devices.

The connection is carried out as a DIN socket at the rear of the chamber as follows:

ANALOG OUTPUT 4-20 mA DC

PIN 1: Temperature –
PIN 2: Temperature +

Temperature range:

BD: 0 °C / *32 °F* to +100 °C / *212 °F*
ED, FD: 0 °C / *32 °F* to +300 °C / *572 °F*
A suitable DIN plug is enclosed.

Figure 10: Pin allocation of DIN socket for option analog outputs

8.6 Water protected internal socket (option BD)

You can turn on or off the disconnectable water protected internal socket by switch (9), independent of the incubator operating or not. Thus, devices operated inside the incubator can be started or stopped without any need to open the chamber doors.

The internal socket is splash proof.

IP system of protection 65 230 V 1N ~ 50-60 Hz. Charge max. 500 W

Maximum permitted operating temperature with this option: 50 °C / *122 °F*.

WARNING

Exceeding of the permitted maximum temperature.
Electrical hazard.
Danger of death.
Damage to the internal socket.

∅ Do NOT exceed the temperature set-point of 50 °C / *122 °F*.
➢ Set the mechanical thermostat class 3.1 to 50 °C / *122 °F*.

Heat emission of electrical devices connected inside the chamber may modify the temperature range.

CAUTION

Risk of short circuit.
Damage to the unit.

➢ Use the delivered plug only (IP protection type 66). Plug-in the plug and turn it to secure.
➢ If the socket is not used, close the lift-up lid and turn it for securing.

Controller shutdown by the On/Off switch (5) has no effect on the internal socket.

WARNING

Internal socket switched on even though controller is shut down.
Electrical hazard.

➢ Turn off the internal socket separately, when not in use, by switch (9).

9. Maintenance, cleaning, and service

9.1 Maintenance intervals, service

DANGER

Electrical hazard.

Danger of death.

∅ The unit must NOT become wet during operation or maintenance work.

∅ Do NOT remove the rear panel of the unit.

➢ Disconnect the unit before conducting maintenance work. Disconnect the power plug.

➢ Ensure all maintenance work is conducted by licensed electricians or experts authorized by BINDER.

Ensure regular maintenance work is performed at least once a year.

The warranty becomes void if maintenance work is conducted by non-authorized personnel..

Replace the door gasket only when cold. Otherwise, the door gasket may become damaged.

We recommend taking out a maintenance agreement. Please consult BINDER Service.

BINDER telephone hotline:	+49 (0) 7462 2005 555
BINDER fax hotline:	+49 (0) 7462 2005 93555
BINDER e-mail hotline:	service@binder-world.com
BINDER service hotline USA:	+1 866 885 9794 or +1 631 224 4340 x3 (toll-free in the USA)
BINDER service hotline Asia Pacific:	+852 390 705 04 or +852 390 705 03
BINDER service hotline Russia and CIS	+7 495 988 15 16
BINDER Internet website	http://www.binder-world.com
BINDER address	BINDER GmbH, post office box 102, D-78502 Tuttlingen

International customers, please contact your local BINDER distributor.

9.2 Cleaning and decontamination

Clean the unit after each use to avoid potential corrosion damage by ingredients of the test material.

DANGER

Electrical hazard.

Danger of death.

∅ Do NOT spill water or cleaning agents over the inner and outer surfaces.

➢ Disconnect the unit before cleaning. Disconnect the power plug.

➢ Completely dry the appliance before turning it on again.

9.2.1 Cleaning

Disconnect the chamber from the power supply before cleaning. Disconnect the power plug.

	The interior of the unit must be kept clean. Thoroughly remove any residues of the charging material

Wipe the surfaces with a moistened towel. In addition, you can use the following cleaning agents:

Exterior surfaces inner chamber racks door gaskets	Standard commercial cleaning detergents free from acid or halides. Alcohol-based solutions. We recommend using the neutral cleaning agent Art. No. 1002-0016.
Instrument panel	Standard commercial cleaning detergents free from acid or halides. We recommend using the neutral cleaning agent Art. No. 1002-0016.
Zinc coated hinge parts rear unit wall	Standard commercial cleaning detergents free from acid or halides. Do NOT use a neutral cleaning agent on zinc coated surfaces.

Do not use cleaning agents that may cause a hazard due to reaction with components of the device or the charging material. If there is doubt regarding the suitability of cleaning products, please contact BINDER service.

	We recommend using the neutral cleaning agent Art. No. Art. Nr. 1002-0016 for a thorough cleaning. Any corrosive damage that may arise following use of other cleaning agents is excluded from liability by BINDER GmbH. Any corrosive damage caused by a lack of cleaning, is excluded from liability by BINDER GmbH.

	CAUTION **Danger of corrosion.** **Damage to the unit.** ∅ Do NOT use acidic or chlorine cleaning detergents. ∅ Do NOT use a neutral cleaning agent on other kind of surfaces e.g., the zinc coated hinge parts or the rear unit wall.

	For surface protection, perform cleaning as quickly as possible. After cleaning completely remove cleaning agents from the surfaces with a moistened towel. Let the unit dry.

	Soapsuds may contain chlorides and must therefore NOT be used for cleaning.

	With every decontamination method, always use adequate personal safety controls.

Following cleaning, leave the unit door open or remove the access port plugs.

	The neutral cleaning agent may cause health problems in contact with skin and if ingested. Follow the operating instructions and safety hints labeled on the bottle of the neutral cleaning agent.

Recommended precautions: To protect the eyes use sealed protective goggles. Suitable protective gloves with full contact: butyl or nitrile rubber, penetration time >480 minutes.

CAUTION

Contact with skin, ingestion.

Skin and eye damage due to chemical burns.

∅ Do not ingest. Keep away from food and beverages.

∅ Do NOT empty into drains.

➢ Wear protective gloves and goggles.

➢ Avoid skin contact.

9.2.2 Decontamination

The operator must ensure that proper decontamination is performed in case a contamination of the chamber by hazardous substances has occurred.

Disconnect the chamber from the power supply prior to decontamination. Pull the power plug.

Do not use decontamination agents that may cause a hazard due to reaction with components of the device or the charging material. If there is doubt regarding the suitability of cleaning products, please contact BINDER service.

You can use the following disinfectants:

Inner chamber	Standard commercial surface disinfectants free from acid or halides. Alcohol-based solutions. We recommend using the disinfectant spray Art. No. 1002-0022.

☞	For chemical disinfection, we recommend using the disinfectant spray Art. No. 1002-0022. Any corrosive damage that may arise following use of other disinfectants is excluded from liability by BINDER GmbH.

☞	With every decontamination method, always use adequate personal safety controls.

In case of impurity of the interior with biological or chemical hazardous material, there are three possible procedures depending on the type of contamination and of the charging material.

1. The drying and heating ovens ED and FD can be hot air sterilized at 190 °C / *374 °F* for at least 30 minutes. All inflammable goods must be removed from the interior before. With the incubators BD it is possible to perform a hot-air disinfection at 100 °C / *212 °F*.
2. Spray the inner chamber with an appropriate disinfectant.

   Before start-up, the unit must be absolute dry and ventilated, because explosive gases may form during the decontamination process.
3. If necessary, have strongly contaminated inner chamber parts removed by an engineer for cleaning, or have them exchanged. Sterilize the inner chamber parts in a sterilizer or autoclave.

	In case of eye contact, the disinfectant spray may cause eye damage due to chemical burns. Follow the operating instructions and safety hints labeled on the bottle of the disinfectant spray.

Recommended precautions: To protect the eyes use sealed protective goggles.

	CAUTION **Eye contact.** **Eye damage due to chemical burns.** ∅ Do NOT empty into drains. ➢ Wear protective goggles.

	After using the disinfectant spray, allow the unit to dry thoroughly, and aerate it sufficiently.

9.3 Sending the unit back to BINDER GmbH

If you return a BINDER product to us for repair or any other reason, we will only accept the product upon presentation of an **authorization number** (RMA number) that has previously been issued to you. An authorization number will be issued after receiving your complaint either in writing or by telephone **prior** to your sending the BINDER product back to us. The authorization number will be issued following receipt of the information below:

- BINDER product type and serial number
- Date of purchase
- Name and address of the dealer from which you bought the BINDER product
- Exact description of the defect or fault
- Complete address, contact person and availability of that person
- Exact location of the BINDER product in your facility
- A contamination clearance certificate (chap. 13) must be faxed in advance

The authorization number must be applied to the packaging in such a way that it can be easily recognized or be recorded clearly in the delivery documents.

	For safety reasons we cannot accept a unit delivery if it does not carry an authorization number.

Return address: BINDER GmbH
Abteilung Service
Gänsäcker 16
78502 Tuttlingen
Germany

10. Disposal

10.1 Disposal of the transport packing

Packing element	Material	Disposal
Straps to fix packing on pallet	Plastic	Plastic recycling
Wooden transport box (option)	Non-wood (compressed matchwood, IPPC standard)	Wood recycling
with metal screws	Metal	Metal recycling
Pallet (from size 115 on) with foamed plastic stuffing (from size 240 on)	Solid wood (IPPC standard)	Wood recycling
Transport box with metal clamps	Cardboard	Paper recycling
	Metal	Metal recycling
Top cover (size 720 only)	Cardboard	Paper recycling
Removal aid (sizes 240 and 400 only) 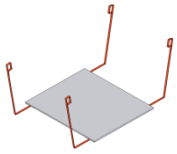	Cardboard	Paper recycling
	Plastic	Plastic recycling
Edge protection	Styropor® or PE foam	Plastic recycling
Protection of doors and racks	PE foam	Plastic recycling
Bag for operating manual	PE foil	Plastic recycling
Insulating air cushion foil (packing of optional accessories)	PE foil	Plastic recycling

If recycling is not possible, all packing parts can also be disposed of with normal waste.

10.2 Decommissioning

Turn off ED units sizes 400 and 720 at the main power switch (10). Disconnect the unit from the power supply.

	When turning off the main power switch (10), the stored parameters remain saved.

- Temporal decommissioning: See indications for appropriate storage, chap. 3.3.
- Final decommissioning: Dispose of the unit as described in chap. 10.3 to 10.5.

10.3 Disposal of the unit in the Federal Republic of Germany

According to directive 2002/96/EC of the European Parliament and of the Council on waste electrical and electronic equipment (WEEE), BINDER devices are classified as “monitoring and control instruments” (category 9) only intended for professional use“. They must not be disposed of at public collecting points.

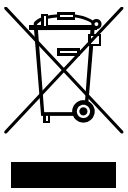

The incubators BD and drying and heating ovens ED and FD bear the symbol for the marking of electrical and electronic equipment manufactured / placed on the market in the EC after 13 August 2005 and be disposed of in separate collection according to the directive 2002/96/EC on waste electrical and electronic equipment (WEEE) and German national law for electrical and electronic equipment (Elektro- und Elektronikgerätegesetz, ElektroG). WEEE marking: crossed-out wheeled bin with solid bar under. A significant part of the materials must be recycled in order to protect the environment.

At the end of the device’s service life, have the device disposed of according to the German national law for electrical and electronic equipment (Elektro- und Elektronikgerätegesetz, ElektroG) from 23 March 2005, BGBl. I p. 762 or contact BINDER Service who will organize taking back and disposal of the unit according to the German national law for electrical and electronic equipment (Elektro- und Elektronikgerätegesetz, ElektroG) from 23 March 2005, BGBl. I p. 762.

	CAUTION **Violation against existing law.** ∅ Do NOT dispose of BINDER devices at public collecting points. ➢ Have the device disposed of professionally at a recycling company that is certified according to the German national law for electrical and electronic equipment (Elektro- und Elektronikgerätegesetz, ElektroG) from 23 March 2005, BGBl. I p. 762. *or* ➢ Instruct BINDER Service to dispose of the device. The general terms of payment and delivery of BINDER GmbH apply, which were valid at the time of purchasing the unit.

Certified companies disassemble waste BINDER equipment in primary substances for recycling according to directive 2002/96/EC by. The devices must be free from toxic, infectious or radioactive substances in order to eliminate any health hazards to the employees of the recycling companies.

	Prior to handing the unit over to a recycling company, it is the user's responsibility that it is free from toxic, infectious or radioactive substances. • Prior to disposal, clean all introduced or residual toxic substances from the unit. • Prior to disposal, disinfect the unit from all sources of infection. Be aware of the fact that sources of infection may also be located outside the inner chamber. • If you cannot safely remove all toxic substances and sources of infection from the unit, dispose of it as "special" waste according to national law. • Fill out the contamination clearance certificate (chap. 13) and enclose it with the unit.

	WARNING **Contamination of the device with toxic, infectious or radioactive substances.** **Danger of intoxication.** **Danger of infection.** ∅ NEVER take a unit contaminated with toxic substances or sources of infection for recycling according to directive 2002/96/EC. ➢ Prior to disposal, remove all toxic substances and sources of infection from the unit. ➢ Dispose of a unit from which all toxic substances or sources of infection cannot be safely removed as special waste according to national law.

10.4 Disposal of the unit in the member states of the EC except for the Federal Republic of Germany

According to directive 2002/96/EC of the European Parliament and of the Council on waste electrical and electronic equipment (WEEE), BINDER devices are classified as "monitoring and control instruments" (category 9) only intended for professional use". They must not be disposed of at public collecting points.

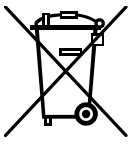

The incubators BD and drying and heating ovens ED and FD bear the symbol for the marking of electrical and electronic equipment manufactured / placed on the market in the EC after 13 August 2005 and be disposed of in separate collection according to the directive 2002/96/EC on waste electrical and electronic equipment (WEEE). WEEE marking: crossed-out wheeled bin with solid bar under.

At the end of the device's service life, notify the distributor who sold you the device, who will take back and dispose of the unit according to the directive 2002/96/EC of 27 January 2003 on waste electrical and electronic equipment (WEEE).

CAUTION

Violation against existing law.

∅ Do NOT dispose of BINDER devices at public collecting points.

➢ Have the device disposed of professionally at a recycling company that is certified according to conversion of the directive 2002/96/EC into national law.

or

➢ Instruct the distributor who sold you the device to dispose of it. The agreements apply that were reached with the distributor when purchasing the unit (e.g. his general terms of payment and delivery).

➢ If your distributor is not able to take back and dispose of the unit, please contact BINDER service.

Certified companies disassemble waste BINDER equipment in primary substances for recycling according to directive 2002/96/EC. The devices must be free from toxic, infectious or radioactive substances in order to eliminate any health hazards to the employees of the recycling companies.

Prior to handing the unit over to a recycling company, it is the user's responsibility that it is free from toxic, infectious or radioactive substances.

- Prior to disposal, clean all introduced or residual toxic substances from the unit.
- Prior to disposal, disinfect the unit from all sources of infection. Be aware of the fact that sources of infection may also be located outside the inner chamber.
- If you cannot safely remove all sources of infection and toxic substances from the unit, dispose of it as "special" waste according to national law.
- Fill out the contamination clearance certificate (chap. 13) and enclose it with the unit.

WARNING

Contamination of the device with toxic, infectious or radioactive substances.

Danger of intoxication.

Danger of infection.

∅ NEVER take a unit contaminated with toxic substances or sources of infection for recycling according to directive 2002/96/EC.

➢ Prior to disposal, remove all toxic substances and sources of infection from the unit.

➢ Dispose of a unit from which all toxic substances or sources of infection cannot be safely removed as "special" waste according to national law.

10.5 Disposal of the unit in non-member states of the EC

CAUTION

Alteration of the environment.

➢ For final decommissioning and disposal of the chamber, please contact BINDER Service.

➢ Follow the statutory regulations for appropriate, environmentally friendly disposal.

The main board of the chamber includes a lithium cell. Please dispose of it according to national regulations.

11. Troubleshooting

Fault description	Possible cause	Required measures
Temperature		
Set-point temperature is not reached after specified time.	Unit door not properly closed.	Completely close unit door.
	Door gasket defective.	Replace door gasket,
	Controller not adjusted, or adjustment interval exceeded.	Calibrate and adjust controller.
	Wrong voltage.	Check power supply for voltage of 115V or 230V.
FD: The fan doesn't turn or turns too slowly.	Fan defective.	Contact BINDER service.
Chamber heating permanently, set-point not held.	Controller defective.	Contact BINDER service.
	Pt 100 sensor defective.	
	Semiconductor relay defective	
	Controller not adjusted, or adjustment interval exceeded.	Calibrate and adjust controller.
Chamber doesn't heat up. Red heating control light in the display is lit.	Heating element defective.	Contact BINDER service.
	Semiconductor relay defective.	
Chamber doesn't heat up. Red heating control light in the display is not lit. Controller display working.	Timer run off.	Program the timer or change to time function Continuous operation (chap. 6.3)
	Semiconductor relay defective.	Contact BINDER service.
	Controller defective.	
Unit without function, only the green "stand-by" LED is lit	Unit in stand-by mode	Press down the ON/OFF button (5) until the display lights up.
BD, option ED,FD: Temperature inside the chamber too high, Red alarm pilot lamp of safety device (7a) is lit..	Safety device class 3.1 has responded.	Check the settings of the temperature set-point and of the safety device class 3.1 (chap. 7.2).
ED, FD: Unit without function. Red alarm pilot lamp of safety device (7a) is lit.	Safety device class 2 has turned off the chamber.	Let cool down the chamber and press down RESET button. Check the settings of the temperature set-point and of the safety device class 2 (chap. 7.1). If appropriate, select suitable limit value.
	Safety device class 2 defective.	Contact BINDER service.
Unit without any function.	No power supply.	Check connection to power supply.
	Unit fuse has responded.	Check unit fuse and replace it if appropriate. If it responds again, contact BINDER service.
	Controller defective.	Contact BINDER service.
Deviations from the indicated heating-up times.	Chamber fully loaded.	Load the chamber less or consider longer heating-up times.
Controller		
Message „1999" in the controller display	Sensor rupture between sensor and controller.	Contact BINDER service.
The controller returns to Normal Display from any level.	No button was hit for more than approx. 30 sec.	Repeat entries, enter the values rapidly.

	Only qualified service personnel authorized by BINDER must perform repair. Repaired units must comply with the BINDER quality standards.

12. Technical description

12.1 Factory calibration and adjustment

This unit was calibrated and adjusted in the factory. Calibration and adjustment were performed using standardized test instructions, according to the QM DIN EN ISO 9001 system applied by BINDER (certified since December 1996 by TÜV CERT). All test equipment used is subject to the administration of measurement and test equipment that is also constituent part of the BINDER QM DIN EN ISO 9001 systems. They are controlled and calibrated to a DKD-Standard at regular intervals.

12.2 Definition of usable volume

The usable volume illustrated below is calculated as follows:

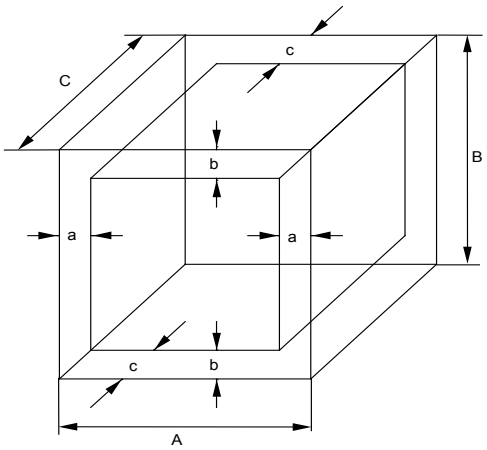

A, B, C = Internal dimensions (W, H, D)
a, b, c = Wall clearances

a = 0.1 x A
b = 0.1x B
c = 0.1 x C

V_{USE} = (A - 2a) x (B - 2b) x (C - 2c)

Figure 11: Determination of the useable volume

The technical data refers to the defined usable volume.

	Do NOT place samples outside this usable volume. Do NOT load this volume by more than half to enable sufficient airflow inside the chamber. Do NOT divide the usable volume into separate parts with large area samples. Do NOT place samples too close to each other in order to permit circulation between them and thus obtain a homogenous distribution of temperature.

12.3 Over current protection

Single-phase devices are protected by a miniature fuse against over current, accessible from the outside. The miniature fuse is located at the rear of the chamber below the strain relief of the power cord. The fuse holder is equipped with a fuse clip 5mm x 20 mm. (CUL-Version 6,3x32 mm). The fuse may be replaced only with a substitute of the same ratings. Refer to the technical data of the respective device type.

Three-phase devices are equipped with internal fuses not accessible from outside. If these fuses are blown, please inform an electronic engineer or BINDER service.

12.4 BD technical data

Unit size			BD 23	BD 53	BD 115	BD 240	BD 400	BD 720
Exterior dimensions								
Width		mm *inch*	435 *17.13*	635 *25.00*	835 *32.87*	1035 *40.75*	1235 *48.62*	1235 *48.62*
Height (incl. feet/castors)		mm *inch*	495 *19.49*	620 *24.41*	705 *27.76*	825 *32.48*	1025 *40.35*	1530 *60.24*
Depth		mm *inch*	520 *20.47*	575 *22.64*	645 *25.39*	745 *29.33*	765 *30.12*	865 *34.06*
incl. door handle and exhaust duct		mm *inch*	105 *4.13*	105 *4.13*	105 *4.13*	105 *4.13*	105 *4.13*	105 *4.13*
Wall clearance rear		mm *inch*	100 *3.94*	100 *3.94*	100 *3.94*	100 *3.94*	100 *3.94*	100 *3.94*
Wall clearance side		mm *inch*	100 *3.94*	160 *6.30*	160 *6.30*	160 *6.30*	160 *6.30*	160 *6.30*
Exhaust duct, outer diameter		mm *inch*	52 *2.05*	52 *2.05*	52 *2.05*	52 *2.05*	52 *2.05*	52 *2.05*
Steam space volume		l *cu.ft.*	36 *1.27*	70 *2.47*	142 *5.02*	283 *10.0*	457 *16.15*	808 *28.55*
Number of door(s)			1	1	1	2	2	2
Interior dimensions								
Width		mm *inch*	222 *8.74*	400 *15.75*	600 *23.62*	800 *31.50*	1000 *39.37*	1000 *39.37*
Height		mm *inch*	330 *12.99*	400 *15.75*	480 *18.90*	600 *23.62*	800 *31.50*	1200 *47.24*
Depth		mm *inch*	277 *10.91*	330 *12.99*	400 *15.75*	500 *19.69*	500 *19.69*	600 *23.62*
Interior volume		l *cu.ft.*	20 *0.7*	53 *1.9*	115 *4.1*	240 *8.6*	400 *14.3*	720 *25.7*
Quantity of racks (regular / max.)			2/4	2/4	2/5	2/7	2/9	2/15
Load per rack		Kg *lbs*	12 *26*	15 *33*	20 *44*	30 *66*	35 *77*	45 *99*
Permitted total load		Kg *lbs*	25 *55*	40 *88*	50 *110*	70 *155*	90 *199*	120 *265*
Weight (empty)		Kg *lbs*	26 *57*	43 *95*	61 *135*	93 *205*	135 *298*	191 *422*
Temperature data								
Temperature range, 5 ° C / *9 °F* above ambient up to		°C *°F*	100 *212*	100 *212*	100 *212*	100 *212*	100 *212*	100 *212*
Temperature fluctuation	at 37 °C	± K	0.2	0.1	0.1	0.1	0.1	0.1
	at 50 °C	± K	0.3	0.1	0.1	0.1	0.1	0.1
Temperature uniformity (variation 1)	at 37 °C	± K	0.5	0.5	0.4	0.5	0.5	0.5
	at 50 °C	± K	1.8	1.1	0.8	0.9	0.9	0.8
Heating up time 2)	to 37 °C	Min	49	38	62	70	105	84
	to 50 °C	Min	51	59	91	115	132	90
Recovery time after door was opened for 30 sec 2)	at 37 °C	Min	3	5	5	5	6	4
	at 50 °C	Min	4	7	7	6	29	24

Unit size		BD 23	BD 53	BD 115	BD 240	BD 400	BD 720
Electrical data							
IP system of protection acc. to EN 60529	IP	20	20	20	20	20	20
Nominal voltage (±10 %) 50/60 Hz	V	230 1N~	230 1N~	230 1N~	230 1N~	230 1N~	230 1N~
Nominal power	kW	0.2	0.4	0.4	0.68	0.85	1.25
Energy consumption at 37°C / *98.6°F*	Wh/h	11	11	20	33	56	80
Unit fuse 5 x 20 mm 230V / 10A / middle-time-lag (M)	Amp	10 external	10 external	10 external	10 external	10 external	10 external
Power plug		shock proof plug					
Installation category acc. to IEC 61010-1		II	II	II	II	II	II
Pollution degree acc. to IEC 61010-1		2	2	2	2	2	2

Electrical connection data BD-UL acc. to cUL standard (for USA and Canada):

Unit size		BD 23-UL	BD 53-UL	BD 115-UL	BD 240-UL	BD 400-UL	BD 720-UL
Electrical data							
Nominal voltage (±10%) 60 Hz	V	115 1N~	115 1N~	115 1N~	115 1N~	115 1N~	115 1N~
Nominal power	kW	0.20	0.30	0.40	0.68	0.85	1.25
Nominal current	Amp	1.8	2.6	3.5	5.9	7.4	10.9
Power plug	NEMA	5-15P	5-15P	5-15P	5-15P	5-15P	5-20P
Unit fuse 6,3 x 32 mm 250V / super-time-lag TT	Amp	12,5 external	12,5 external	12,5 external	12,5 external	12,5 external	16 external
Additional temperature fuse class 1 (DIN 12880)		internal	internal	internal	internal	internal	internal

Legend: 1) without outer glass door 2) up to 98 % of the set value

All technical data is specified for unloaded units with standard equipment at an ambient temperature of +25 °C / *77 °F* and a power supply voltage fluctuation of ±10. The temperature data is determined in accordance to BINDER factory standard following DIN 12880, observing the recommended wall clearances of 10 % of the height, width and depth of the inner chamber.

All indications are average values, typical for units produced in series. We reserve the right to change technical specifications at any time.

	If the cabinet is fully loaded, the specified heating up times may vary according to the load.

	With option interior socket: If electrical devices are connected and operating inside the chamber, the temperature range may be modified due to heat emission.

12.5 ED technical data

Unit size		ED 23	ED 53	ED 115	ED 240	ED 400	ED 720
Exterior dimensions							
Width	mm *inch*	435 *17.13*	635 *25.00*	835 *32.87*	1035 *40.75*	1235 *48.62*	1235 *48.62*
Height (incl. feet/castors)	mm *inch*	495 *19.49*	620 *24.41*	705 *27.76*	825 *32.48*	1025 *40.35*	1530 *60.24*
Depth	mm *inch*	520 *20.47*	575 *22.64*	645 *25.39*	745 *29.33*	765 *30.12*	865 *34.06*
incl. door handle and exhaust duct	mm *inch*	105 *4.13*	105 *4.13*	105 *4.13*	105 *4.13*	105 *4.13*	105 *4.13*
Wall clearance rear	mm *inch*	100 *3.94*	100 *3.94*	100 *3.94*	100 *3.94*	100 *3.94*	100 *3.94*

Unit size			ED 23	ED 53	ED 115	ED 240	ED 400	ED 720
Exterior dimensions (continued)								
Wall clearance side		mm *inch*	100 *3.94*	160 *6.30*	160 *6.30*	160 *6.30*	160 *6.30*	160 *6.30*
Exhaust duct, outer diameter		mm *inch*	52 *2.05*	52 *2.05*	52 *2.05*	52 *2.05*	52 *2.05*	52 *2.05*
Steam space volume		l *cu.ft.*	36 *1.27*	70 *2.47*	142 *5.02*	283 *10.0*	457 *16.15*	808 *28.55*
Number of door(s)			1	1	1	2	2	2
Interior dimensions								
Width		mm *inch*	222 *8.74*	400 *15.75*	600 *23.62*	800 *31.50*	1000 *39.37*	1000 *39.37*
Height		mm *inch*	330 *12.99*	400 *15.75*	480 *18.90*	600 *23.62*	800 *31.50*	1200 *47.24*
Depth		mm *inch*	277 *10.91*	330 *12.99*	400 *15.75*	500 *19.69*	500 *19.69*	600 *23.62*
Interior volume		l *cu.ft.*	20 *0.7*	53 *1.9*	115 *4.1*	240 *8.6*	400 *14.3*	720 *25.7*
Quantity of racks (regular / max.)			2/4	2/5	2/6	2/7	2/10	2/16
Load per rack		Kg *lbs*	12 *26*	15 *33*	20 *44*	30 *66*	35 *77*	45 *99*
Permitted total load		Kg *lbs*	25 *55*	40 *88*	50 *110*	70 *155*	90 *199*	120 *265*
Weight (empty)		Kg *lbs*	22 *49*	42 *93*	57 *126*	86 *190*	125 *276*	174 *384*
Temperature data								
Temperature range, 5 °C / *9 °F* above ambient up to		°C °F	300 572	300 572	300 572	300 572	300 572	300 572
Temperature fluctuation at 150 °C / *302 °F*		± K	0.3	0.3	0.3	0.3	0.3	0.3
Temperature uniformity (variation 1)	at 70 °C / *158 °F*	± K	1.5	2	1.5	1.5	1.7	1.5
	at 150 °C / *302 °F*	± K	2.5	3.2	2.5	2.5	3	2.8
	at 300 °C / *572 °F*	± K	3.8	4.5	4.5	5.0	5.0	5.0
Heating up time 2)	to 70 °C / *158 °F*	Min	13	14	15	40	49	56
	to 150 °C / *302 °F*	Min	24	27	29	48	62	69
	to 250 °C / *482 °F*	Min	35	61	66	61	74	80
Recovery time after door was open for 30 sec 2)	at 70 °C / *158 °F*	Min	2.5	2	2	5	4	4
	at 150 °C / *302 °F*	Min	5	6	9	13	20	14
	at 300 °C / *572 °F*	Min	8	11	14	18	24	18
Ventilation data								
Air change	at 70 °C / *158 °F*	x/h	10	8	12	11	11	10
	at 150 °C / *302 °F*	x/h	13	12	10	10	10	9
	at 300 °C / *572 °F*	x/h	17	20	10	9	9	8
Electrical data								
IP system of protection acc. to EN 60529			20	20	20	20	20	20
Nominal voltage (±10%) 50/60 Hz		V	230 1N~	230 1N~	230 1N~	230 1N~	400 3N~	400 3N~
Nominal power		kW	0.8	1.20	1.60	2.70	3.40	5.00
Energy consumption	at 70 °C / *158 °F*	Wh/h	43	60	90	143	201	220
	at 150 °C / *302 °F*	Wh/h	148	210	300	447	672	750
	at 300 °C / *572 °F*	Wh/h	450	600	360	700	1000	1200
Unit fuse 5 x 20 mm / 230V / middle-time-lag (M)		Amp	10 external	10 external	10 external	16 external	3 x 16 internal	3 x 16 internal

Unit size	ED 23	ED 53	ED 115	ED 240	ED 400	ED 720
Electrical data (continued)						
Power plug	shock proof plug				CEE plug 5 poles	
Installation category acc. to IEC 61010-1	II	II	II	II	II	II
Pollution degree acc. to IEC 61010-1	2	2	2	2	2	2

Electrical connection data ED-UL acc. to cUL standard (for USA and Canada):

Unit size		ED 23-UL	ED 53-UL	ED 115-UL	ED 240-UL	ED 400-UL	ED 720-UL
Electrical data							
Nominal voltage (±10%) 60 Hz	V	115 1N~	115 1N~	115 1N~	208 3N~	208 3N~	208 3N~
Nominal power	kW	0.80	1.20	1.60	2.70	3.40	5.00
Nominal current	Amp	7.0	10.5	14.0	11.2	10.6	15.6
Power plug	NEMA	5-20P	5-20P	5-20P	L21-20P	L21-20P	L21-20P
Unit fuse 6,3 x 32 mm / 250V / super-time-lag TT	Amp	12.5 external	16 external	16 external	3 x 16 internal	3 x 16 internal	3 x 16 internal

Legend: 1) without outer glass door 2) up to 98 % of the set value

All technical data is specified for unloaded units with standard equipment at an ambient temperature of +25 °C / *77 °F* and a power supply voltage fluctuation of ±10. The temperature data is determined in accordance to BINDER factory standard following DIN 12880, observing the recommended wall clearances of 10 % of the height, width and depth of the inner chamber.

All indications are average values, typical for units produced in series. We reserve the right to change technical specifications at any time.

If the cabinet is fully loaded, the specified heating up times may vary according to the load.

12.6 FD technical data

Unit size		FD 23	FD 53	FD 115	FD 240
Exterior dimensions					
Width	mm / *inch*	435 / *17.13*	635 / *25.00*	835 / *32.87*	1035 / *40.75*
Height (incl. feet)	mm / *inch*	495 / *19.49*	620 / *24.41*	705 / *27.76*	825 / *32.48*
Depth	mm / *inch*	520 / *20.47*	575 / *22.64*	645 / *25.39*	745 / *29.33*
incl. door handle and exhaust duct	mm / *inch*	105 / *4.13*	105 / *4.13*	105 / *4.13*	105 / *4.13*
Wall clearance rear	mm / *inch*	100 / *3.94*	100 / *3.94*	100 / *3.94*	100 / *3.94*
Wall clearance side	mm / *inch*	100 / *3.94*	160 / *6.30*	160 / *6.30*	160 / *6.30*
Exhaust duct, outer diameter	mm / *inch*	52 / *2.05*	52 / *2.05*	52 / *2.05*	52 / *2.05*
Steam space volume	l / *cu.ft.*	36 / *1.27*	77 / *2.72*	158 / *5.58*	308 / 10.88
Number of door(s)		1	1	1	2
Interior dimensions					
Width	mm / *inch*	222 / *8.74*	400 / *15.75*	600 / *23.62*	800 / *31.50*
Height	mm / *inch*	330 / *12.99*	400 / *15.75*	480 / *18.90*	600 / *23.62*
Depth	mm / *inch*	277 / *10.91*	330 / *12.99*	400 / *15.75*	500 / *19.69*
Interior volume	l / *cu.ft.*	20 / *0.7*	53 / *1.9*	115 / *4.1*	240 / *8.6*
Quantity of racks (regular / max.)		2/4	2/5	2/6	2/7
Load per rack	Kg / *lbs*	12 / *26*	15 / *33*	20 / *44*	30 / *66*
Permitted total load	Kg / *lbs*	25 / *55*	40 / *88*	50 / *110*	70 / *155*
Weight (empty)	Kg / *lbs*	33 / *73*	44 / 97	62 / *137*	96 / *212*

Unit size			FD 23	FD 53	FD 115	FD 240
Temperature data						
Temperature range, 5 °C above ambient up to		°C / *°F*	300 / *572*	300 / *572*	300 / *572*	300 / *572*
Temperature fluctuation at 150 °C / *302 °F*		± K	0.3	0.3	0.3	0.3
Temperature uniformity (variation 1)	at 70 °C / *158 °F*	± K	0.8	0.8	0.7	0.8
	at 150 °C / *302 °F*	± K	2.2	2	1.8	2
	at 300 °C / *572 °F*	± K	4.3	3.7	3.9	4.3
Heating up time 2)	to 70 °C / *158 °F*	Min	7	7	7	11
	to 150 °C / *302 °F*	Min	22	24	28	24
	to 250 °C / *482 °F*	Min	45	60	49	50
Recovery time after door was open for 30 sec 2)	at 70 °C / *158 °F*	Min	2	2	2	2
	at 150 °C / *302 °F*	Min	4	5	5	6
	at 300 °C / *572 °F*	Min	9	9	12	13
Ventilation data						
Air change	at 70 °C / *158 °F*	x/h	59	59	29	19
	at 150 °C / *302 °F*	x/h	64	64	32	20
	at 300 °C / *572 °F*	x/h	53	53	26	18
Electrical data						
IP system of protection acc. to EN 60529		IP	20	20	20	20
Nominal voltage (±10%) 50/60 Hz		V	230 1N~	230 1N~	230 1N~	230 1N~
Nominal power		kW	0.8	1.20	1.60	2.70
Power plug			shock proof plug			
Unit fuse 5x20mm / 230V / time-lag M		Amp	10 external	10 external	10 external	16 external
Energy consumption	at 70 °C / *158 °F*	Wh/h	145	172	230	370
	at 150 °C / *302 °F*	Wh/h	300	429	544	850
	at 300 °C / *572 °F*	Wh/h	720	951	1100	1400
Installation category acc. to IEC 61010-1			II	II	II	II
Pollution degree acc. to IEC 61010-1			2	2	2	2

Electrical connection data FD-UL acc. to cUL standard (for USA and Canada):

Unit size	FD 23-UL	FD 53-UL	FD 115-UL	FD 240-UL
Electrical data				
Nominal voltage (±10%) 60 Hz	V	115 1N~	115 1N~	115 1N~	208 3N~
Nominal power	kW	0.80	1.20	1.60	2.70
Nominal current	Amp	7.0	10.5	14.0	11.2
Power plug	NEMA	5-15P	5-20P	5-20P	L21-20P
Unit fuse 6,3 x 32 mm / 250V / super time-lag TT	Amp	12,5 external	16 external	16 external	3 x 16 internal

Legend: 1) without outer glass door 2) up to 98 % of the set value

All technical data is specified for unloaded units with standard equipment at an ambient temperature of +25 °C / *77 °F* and a power supply voltage fluctuation of ±10. The temperature data is determined in accordance to BINDER factory standard following DIN 12880, observing the recommended wall clearances of 10 % of the height, width and depth of the inner chamber. Technical data refer to 100% fan speed.

All indications are average values, typical for units produced in series. We reserve the right to change technical specifications at any time.

If the cabinet is fully loaded, the specified heating up times may vary according to the load.

12.7 Equipment and Options Series BD

	To operate the incubator BD, use only original BINDER accessories or accessories / components from third-party suppliers authorized by BINDER. The user is responsible for any risk arising from using unauthorized accessories.

Unit size	BD 23	BD 53	BD 115	BD 240	BD 400	BD 720
Standard equipment						
Microprocessor temperature controller with LED display, timer function, and ramp function	●	●	●	●	●	●
Temperature safety device class 3.1 acc. to DIN 12880	●	●	●	●	●	●
Inner glass door	●	●	●	●	●	●
Communication interface RS 422	●	●	●	●	●	●
Exhaust duct, internal diameter 50 mm / *1.97 inches*, with adjustable ventilation slide	●	●	●	●	●	●
Four castors (2 lockable)	--	--	--	--	--	●

Options / accessories						
Rack, chrome-plated or stainless steel	❍	❍	❍	❍	❍	❍
Perforated rack, stainless steel	❍	❍	❍	❍	❍	❍
Access ports with various diameters, with silicone plug	❍	❍	❍	❍	❍	❍
Lockable door	❍	❍	❍	❍	❍	❍
Rubber pads for safe stacking (4 pieces)	❍	❍	❍	--	--	--
Additional Pt 100 temperature sensor, fix or flexible, with external connection including LEMO plug (3 pins)	❍	❍	❍	❍	❍	❍
Water-proof interior socket, IP type of protection 65, 230 V 1N ~ 50-60 Hz. Max. load 500 W	❍	❍	❍	❍	❍	❍
Analog output 4-20 mA for temperature with 6 pole DIN socket, DIN plug included	❍	❍	❍	❍	❍	❍
Disconnectable audible over-temperature alarm	❍	❍	❍	❍	❍	❍
Data logger kit T 220	❍	❍	❍	❍	❍	❍
Factory calibration certificate	❍	❍	❍	❍	❍	❍
Extension to factory calibration certificate (additional values)	❍	❍	❍	❍	❍	❍
Measuring protocol acc. to DIN 12880	❍	❍	❍	❍	❍	❍
Qualification folder	❍	❍	❍	❍	❍	❍
Unit acc. to cUL standard in 115V 1N~60Hz	❍	❍	❍	❍	❍	❍
Neutral cleaning agent (liquid concentrate)	❍	❍	❍	❍	❍	❍
Stable table on wheels with castors and locking brakes	--	❍	❍	❍	❍	--

Legend: ● Standard equipment ❍ Optional -- Not available

12.8 Equipment and Options Series ED

	To operate the drying and heating oven ED, use only original BINDER accessories or accessories / components from third-party suppliers authorized by BINDER. The user is responsible for any risk arising from using unauthorized accessories.

Unit size	ED 23	ED 53	ED 115	ED 240	ED 400	ED 720
Standard equipment						
Microprocessor temperature controller with LED display, timer function, and ramp function	●	●	●	●	●	●
Temperature safety device class 2 acc. to DIN 12880	●	●	●	●	●	●
Exhaust duct, internal diameter 50 mm / *1.97 inches*, with adjustable ventilation slide	●	●	●	●	●	●
Four castors (2 lockable)	--	--	--	--	--	●

Options / accessories						
Rack, chrome-plated or stainless steel	❍	❍	❍	❍	❍	❍
Perforated rack, stainless steel	❍	❍	❍	❍	❍	❍
Access ports with various diameters, with silicone plug	❍	❍	❍	❍	❍	❍
Communication interface RS 422	❍	❍	❍	❍	❍	❍
Lockable door	❍	❍	❍	❍	❍	❍
Door with window and interior lightning	❍	❍	❍	❍	--	--
FKM door gasket (temperature resistant up to 200 °C)	❍	❍	❍	❍	❍	❍
Rubber pads for safe stacking (4 pieces)	❍	❍	❍	❍	--	--
Temperature safety device class 3.1 acc. to DIN 12880	❍	❍	❍	❍	❍	❍
Analog output 4-20 mA for temperature with 6 pole DIN socket, DIN plug included	❍	❍	❍	❍	❍	❍
Disconnectable audible over-temperature alarm	❍	❍	❍	❍	❍	❍
Data logger kit T 350	❍	❍	❍	❍	❍	❍
Factory calibration certificate	❍	❍	❍	❍	❍	❍
Extension to factory calibration certificate (additional values)	❍	❍	❍	❍	❍	❍
Qualification folder	❍	❍	❍	❍	❍	❍
Unit acc. to cUL standard in 115 V 1N~60Hz	❍	❍	❍	--	--	--
Unit acc. to cUL standard in 208 V 3N~60Hz	--	--	--	❍	❍	❍
Neutral cleaning agent (liquid concentrate)	❍	❍	❍	❍	❍	❍
Stable table on wheels with castors and locking brakes	--	❍	❍	❍	❍	--

Legend: ● Standard equipment ❍ Optional -- Not available

12.9 Equipment and Options Series FD

	To operate the drying and heating oven FD, use only original BINDER accessories or accessories / components from third-party suppliers authorized by BINDER. The user is responsible for any risk arising from using unauthorized accessories.

Unit size	FD 23	FD 53	FD 115	FD 240
Standard equipment				
Microprocessor temperature controller with LED display, timer function, and ramp function	●	●	●	●
Temperature safety device cl. 2 acc. to DIN 12880	●	●	●	●
Exhaust duct, internal diameter 50 mm / *1.97 inches*, with adjustable ventilation slide	●	●	●	●

Options / accessories				
Rack, chrome-plated or stainless steel	❍	❍	❍	❍
Perforated rack, stainless steel	❍	❍	❍	❍
Reinforced rack stainless steel, with 1 set rack lockings	--	--	--	❍
Access ports with various diameters, with silicone plug	❍	❍	❍	❍
Lockable door	❍	❍	❍	❍
Door with window and interior lightning	❍	❍	❍	❍
FKM door gasket (temperature resistant up to 200 °C)	❍	❍	❍	❍
Rubber pads for safe stacking (4 pieces)	❍	❍	❍	--
Temperature safety device class 3.1 acc. to DIN 12880	❍	❍	❍	❍
Analog output 4-20 mA for temperature with 6 pole DIN socket, DIN plug included	❍	❍	❍	❍
Disconnectable audible over-temperature alarm	❍	❍	❍	❍
Data logger kit T 350	❍	❍	❍	❍
Factory calibration certificate	❍	❍	❍	❍
Extension to factory calibration certificate (additional values)	❍	❍	❍	❍
Qualification folder	❍	❍	❍	❍
Unit acc. to cUL standard in 115 V 1N~60Hz	❍	❍	❍	--
Unit acc. to cUL standard in 208 V 3N~60Hz	--	--	--	❍
Neutral cleaning agent (liquid concentrate)	❍	❍	❍	❍
Stable table on wheels with castors and locking brakes	--	❍	❍	❍

Legend: ● Standard equipment ❍ Optional -- Not available

12.10 Accessories and spare parts

BINDER GmbH is responsible for the safety features of the unit only, provided skilled electricians or qualified personnel authorized by BINDER perform all maintenance and repair, and if components relating to chamber safety are replaced in the event of failure with original spare parts. The user is responsible for any risks arising from using unauthorized accessories/components.

Accessories and spare parts BD:

Unit size	BD 23	BD 53	BD 115	BD 240	BD 400	BD 720
Description	**Art. No.**					
Rack, chrome-plated	6004-0050	6004-0002	6004-0003	6004-0004	6004-0005	6004-0006
Rack, stainless steel	6004-0051	6004-0007	6004-0008	6004-0009	6004-0011	6004-0010
Perforated rack, stainless steel	6004-0052	6004-0029	6004-0030	6004-0031	6004-0032	6004-0033
Door gasket silicone	6005-0090	6005-0095	6005-0096	6005-0097	6005-0069	6005-0099
Stable table on wheels with castors and locking brakes	--	9051-0018	9051-0018	9051-0019	9051-0019	--
Unit fuse 5x20mm 250V 10A semi time lag (M)	5006-0012	5006-0012	5006-0012	5006-0012	5006-0012	5006-0012
Rubber pads for safe stacking (4 pc.)	8012-0001	8012-0001	8012-0001	--	--	--

Description	Art. No.
R3.2 controller	5014-0186
RS422 interface board	5014-0189
Thermostat class. 3.1 0 °C / *32 °F* to 120 °C / *248 °F*	5006-0035
Turning knob for thermostat class 3.1	8009-0004
Pilot lamp red	5008-0003
Temperature sensor Pt 100 straight	5002-0021
Data logger kit T 220	8012-0715
Data logger software	8012-0821
Calibration of temperature including certificate	DL016021
Spatial temperature measurement including certificate (2-5 measuring points)	DL016022
Spatial temperature measurement including certificate (6-9 measuring points)	DL016023
Spatial temperature measurement, including certificate (10-18 measuring points)	DL016024
Spatial temperature measurement acc. to DIN 12880, including certificate (27 measuring points)	DL016025
Qualification folder	DL016031
Neutral cleaning agent, 1 kg	1002-0016

Accessories and spare parts ED:

Unit size	ED 23	ED 53	ED 115	ED 240	ED 400	ED 720
Description	**Art. No.**					
Rack, chrome-plated	6004-0050	6004-0002	6004-0003	6004-0004	6004-0005	6004-0006
Rack, stainless steel	6004-0051	6004-0007	6004-0008	6004-0009	6004-0011	6004-0010
Perforated rack, stainless steel	6004-0052	6004-0029	6004-0030	6004-0031	6004-0032	6004-0033
Door gasket silicone	6005-0090	6005-0095	6005-0096	6005-0097	6005-0069	6005-0099
Door gasket made of FKM (temp. resistant up to 200 °C / *392 °F)*	8012-0493	8012-0494	8012-0495	8012-0496	8012-0497	8012-0498
Stable table on wheels with castors and locking brakes	--	9051-0018	9051-0018	9051-0019	9051-0019	--
Unit fuse 5x20mm 250V 10A semi time lag (M)	5006-0012	5006-0012	5006-0012	--	--	--
Unit fuse 5x20mm 250V 16A semi time lag (M)	--	--	--	5006-0013	--	--
Over-current release category B 16 A	--	--	--	--	5006-0042	5006-0042
Rubber pads for safe stacking (4 pc.)	8012-0001	8012-0001	8012-0001	--	--	--

Description	Art. No.
R3.2 controller	5014-0186
RS422 interface board	5014-0189
Thermostat class 2 30 °C / *86 °F* up to 320 °C / *608 °F*	5006-0031
Turning knob for thermostat class 2	8009-0004
Reset-button for thermostat class 2	6002-0035
Pilot lamp red	5008-0003
Temperature sensor Pt 100 straight	5002-0040
Data logger kit T 350	8012-0714
Data logger software	8012-0821
Calibration of temperature including certificate	DL002021
Spatial temperature measurement including certificate (2-5 measuring points)	DL002022
Spatial temperature measurement including certificate (6-9 measuring points)	DL002023
Spatial temperature measurement including certificate (10-18 measuring points)	DL002024
Spatial temperature measurement acc. to DIN 12880 including certificate (27 measuring points)	DL002025
Qualification folder	DL002031
Neutral cleaning agent, 1 kg	1002-0016

Accessories and spare parts FD:

Unit size	FD 23	FD 53	FD 115	FD 240
Description	**Art. No.**			
Rack, chrome-plated	6004-0050	6004-0002	6004-0003	6004-0004
Rack, stainless steel	6004-0051	6004-0007	6004-0008	6004-0009
Perforated rack, stainless steel	6004-0052	6004-0029	6004-0030	6004-0031
Reinforced rack with rack lockings	--	--	--	8012-0345
Door gasket silicone	6005-0090	6005-0095	6005-0096	6005-0097
Door gasket made of FKM (temperature resistant up to 200 °C / *392 °F*)	8012-0493	8012-0494	8012-0495	8012-0496
Stable table on wheels with castors and locking brakes	--	9051-0018	9051-0018	9051-0019
Unit fuse 5x20mm 250V 10A semi time lag (M)	5006-0012	5006-0012	5006-0012	--
Unit fuse 5x20mm 250V 16A semi time lag (M)	--	--	--	5006-0013
Rubber pads for safe stacking (4 pieces)	8012-0001	8012-0001	8012-0001	--

Description	Art. No.
R3.2 controller	5014-0187
Thermostat class 2 30 °C / *86 °F* up to 320 °C / *608 °F*	5006-0031
Turning knob for thermostat class 2	8009-0004
Reset-button for thermostat class 2	6002-0035
Pilot lamp red	5008-0003
Temperature sensor Pt 100 bend-off	5002-0022
Data logger kit T 350	8012-0714
Data logger software	8012-0821
Calibration of temperature including certificate	DL003021
Spatial temperature measurement including certificate (2-5 measuring points)	DL003022
Spatial temperature measurement including certificate (6-9 measuring points)	DL003023
Spatial temperature measurement including certificate (10-18 measuring points)	DL003024
Spatial temperature measurement acc. to DIN 12880 including certificate (27 measuring points)	DL003025
Measurement of air ventilation acc. to ASTM D 5374, including certificate	DL003026
Qualification folder	DL003031
Neutral cleaning agent, 1 kg	1002-0016

13. Contamination clearance certificate

13.1 For units located outside North America and Central America

Declaration with regard to safety and health

Erklärung zur Sicherheit and gesundheitlichen Unbedenklichkeit

The German Ordinance on Hazardous Substances (GefStofV), and the regulations regarding safety at the workplace, require that this form be filled out for all products that are returned to us, so that the safety and health of our employees can be warranted.

Die Sicherheit und Gesundheit unserer Mitarbeiter, die Gefahrstoffverordnung GefStofV und die Vorschriften zur Sicherheit am Arbeitsplatz machen es erforderlich, dass dieses Formblatt für alle Produkte, die an uns zurückgeschickt wird.

	In the absence of a completely filled out form, a repair is not possible. Ohne Vorliegen des vollständig ausgefüllten Formblattes ist eine Reparatur nicht möglich.

- A completely filled out form should be transmitted by Fax (+49 (0) 7462 2005 93555) or by letter in advance to us, so that this information is available before the equipment/component part arrives. A second copy of this form should accompany the equipment/component part. Eventually the carrier should be informed.

  Eine vollständig ausgefüllte Kopie dieses Formblattes soll per Telefax (Nr. +49 (0) 7462 2005 93555) oder Brief vorab an uns gesandt werden, so dass die Information vorliegt, bevor das Gerät/Bauteil eintrifft. Eine weitere Kopie soll dem Gerät/Bauteil beigefügt sein. Ggf. ist auch die Spedition zu informieren.

- Incomplete information or non-conformity with this procedure will inevitably lead to substantial delays in processing. We hope you will have understanding for this measure, which lies outside of our area of influence, and that you will help us to speed up this procedure.

  Unvollständige Angaben oder Nichteinhalten dieses Ablaufs führen zwangsläufig zu beträchtlichen Verzögerungen in der Abwicklung. Bitte haben Sie Verständnis für Maßnahmen, die außerhalb unserer Einflussmöglichkeiten liegen und helfen Sie mit, den Ablauf beschleunigen.

- **Please fill out this form completely.**

  Bitte unbedingt vollständig ausfüllen!

1.	**Unit/ component part / type:** / **Gerät / Bauteil / Typ:**
2.	**Serial No./ Serien-Nr.:**
3.	**Details about utilized substances / biological substances** / **Einzelheiten über die eingesetzten Substanzen/biologische Materialien:**
3.1	**Designations** / **Bezeichnungen:**
a)	_____
b)	_____
c)	_____
3.2	**Safety measures required for handling these substances** / **Vorsichtsmaßnahmen beim Umgang mit diesen Stoffen:**
a)	_____
b)	_____
c)	_____

3.3 Measures to be taken in case of skin contact or release into the atmosphere / Maßnahmen bei Personenkontakt oder Freisetzung:

a) _____

b) _____

c) _____

d) _____

3.4 Other important information that must be taken into account / Weitere zu beachtende und wichtige Informationen:

a) _____

b) _____

c) _____

4. Declaration on the risk of these substances (please checkmark the applicable items) / Erklärung zur Gefährlichkeit der Stoffe (bitte Zutreffendes ankreuzen) :

❑ **4.1 For non toxic, non radioactive, biologically harmless materials / für nicht giftige, nicht radioaktive, biologisch ungefährliche Stoffe:**

We herewith guarantee that the above-mentioned unit / component part… / Wir versichern, dass o.g. Gerät/Bauteil...

❑ Has not been exposed to or contains any toxic or otherwise hazardous substances / weder giftige noch sonstige gefährliche Stoffe enthält oder solche anhaften.

❑ That eventually generated reaction products are non-toxic and also do not represent a hazard / auch evtl. entstandene Reaktionsprodukte weder giftig sind noch sonst eine Gefährdung darstellen.

❑ Eventual residues of hazardous substances have been removed / evtl. Rückstände von Gefahrstoffen entfernt wurden.

❑ **4.2 For toxic, radioactive, biologically harmful or hazardous substances, or any other hazardous materials / für giftige, radioaktive, biologisch bedenkliche bzw. gefährliche Stoffe oder anderweitig gefährliche Stoffe.**

We herewith guarantee that … / Wir versichern, dass …

❑ The hazardous substances, which have come into contact with the above-mentioned equipment/component part, have been completely listed under item 3.1 and that all information in this regard is complete / die gefährlichen Stoffe, die mit dem o.g. Gerät/Bauteil in Kontakt kamen, in 3.1 aufgelistet sind und alle Angaben vollständig sind.

❑ That the unit /component part has not been in contact with radioactivity / das Gerät/Bauteil nicht mit Radioaktivität in Berührung kam

5. Kind of transport / transporter / Transportweg/Spediteur:

Transport by (means and name of transport company, etc.) Versendung durch (Name Spediteur o.ä.)

_____

Date of dispatch to BINDER GmbH / Tag der Absendung an BINDER GmbH:

_____

We herewith declare that the following measures have been taken / Wir erklären, dass folgende Maßnahmen getroffen wurden:

- ❑ Hazardous substances were removed from the unit / component part, so that no hazard exists for corresponding persons in the handling or repair of these items / das Gerät/Bauteil wurde von Gefahrstoffen befreit, so dass bei Handhabung/Reparaturen für die betreffenden Person keinerlei Gefährdung besteht
- ❑ The unit was securely packaged and properly identified / das Gerät wurde sicher verpackt und vollständig gekennzeichnet.
- ❑ Information about the hazardousness of the shipment (if required) has been provided to the transporter / der Spediteur wurde (falls vorgeschrieben) über die Gefährlichkeit der Sendung informiert.

We herewith commit ourselves and guarantee that we will indemnify BINDER GmbH for all damages that are a consequence of incomplete or incorrect information provided by us, and that we will exempt BINDER GmbH from eventual damage claims by third parties./ Wir versichern, dass wir gegenüber BINDER für jeden Schaden, der durch unvollständige und unrichtige Angaben entsteht, haften und BINDER gegen eventuell entstehende Schadenansprüche Dritter freistellen.

We are aware that, in accordance with Article 823 of the German Civil Code (BGB), we are directly liable with regard to third parties, in this instance especially the employees of BINDER GmbH, who have been entrusted with the handling / repair of the unit / component. / Es ist uns bekannt, dass wir gegenüber Dritten – hier insbesondere mit der Handhabung/Reparatur des Geräts/des Bauteils betraute Mitarbeiter der Firma BINDER - gemäß §823 BGB direkt haften

Name: _____

Position: _____

Date / Datum: _____

Signature / Unterschrift: _____

Company stamp / Firmenstempel:

Equipment that is returned to the factory for repair must be accompanied by a completely filled out contamination clearance certificate. For service and maintenance works on site, such a contamination clearance certificate must be submitted to the service technician before the start of the works. No repair or maintenance of the equipment is possible, without a properly filled out contamination clearance certificate.

13.2 For units in North America and Central America

Product Return Authorization Request

Please complete this form and the Customer Decontamination Declaration (next 2 pages) and attach the required pictures. E-mail to: IDL_SalesOrderProcessing_USA@binder-world.com

After we have received and reviewed the complete information we will decide on the issue of a RMA number. Please be aware that size specifications, voltage specifications as well as performance specifications are available on the internet at www.binder-world.us at any time.

Take notice of shipping laws and regulations.

	Please fill:	
Reason for return request	○ Duplicate order	
	○ Duplicate shipment	
	○ Demo	*Page one completed by sales*
	○ Power Plug / Voltage	115V / 230 V / 208 V / 240V
	○ Size does not fit space	
	○ Transport Damage	Shock watch tripped? *(pictures)*
	○ Other (specify below)	
	_____	
Is there a replacement PO?	○ Yes ○ No	
If yes -> PO #		
If yes -> Date PO placed		
Purchase order number		
BINDER model number		
BINDER serial number		
Date unit was received		
Was the unit unboxed?	○ Yes ○ No	
Was the unit plugged in?	○ Yes ○ No	
Was the unit in operation?	○ Yes ○ No	
Pictures of unit attached? *Pictures of Packaging attached?*	○ Yes ○ No ○ Yes ○ No	Pictures have to be attached!

	Customer Contact Information	Distributor Contact Information
Name		
Company		
Address		
Phone		
E-mail		

Customer (End User) Decontamination Declaration

Health and Hazard Safety declaration

To protect the health of our employees and the safety at the workplace, we require that this form is completed by the user for all products and parts that are returned to us. (Distributors or Service Organizations cannot sign this form)

	NO RMA number will be issued without a completed form. Products or parts returned to our NY warehouse without a RMA number will be refused at the dock.

A second copy of the completed form must be attached to the outside of the shipping box.

1.	**Unit/ component part / type**:
2.	**Serial No.**
3.	**List any exposure to hazardous liquids, gasses or substances and radioactive material**
3.1	**List with MSDS sheets attached where available or needed (if there is not enough space available below, please attach a page):** a) _____ b) _____ c) _____
3.2	**Safety measures required for handling the list under 3.1** a) _____ b) _____ c) _____
3.3	**Measures to be taken in case of skin contact or release into the atmosphere**: a) _____ b) _____ c) _____ d) _____
3.4	**Other important information that must be considered**: a) _____ b) _____ c) _____

4. Declaration of Decontamination

For toxic, radioactive, biologically and chemically harmful or hazardous substances, or any other hazardous materials.

We hereby guarantee that

4.1 Any hazardous substances, which have come into contact with the above-mentioned equipment / component part, have been completely listed under item 3.1 and that all information in this regard is complete.

4.2 That the unit /component part has not been in contact with radioactivity

4.3 Any Hazardous substances were removed from the unit / component part, so that no hazard exists for a persons in the shipping, handling or repair of these returned unit

4.4 The unit was securely packaged in the original undamaged packaging and properly identified on the outside of the packaging material with the unit designation, the RMA number and a copy of this declaration.

4.5 Shipping laws and regulations have not been violated.

I hereby commit and guarantee that we will indemnify BINDER Inc for all damages that are a consequence of incomplete or incorrect information provided by us, and that we will indemnify and hold harmless BINDER Inc. from eventual damage claims by third parties.

Name: _____

Position: _____

Company: _____

Address: _____

Phone #: _____

Email: _____

Date: _____

Signature: _____

Equipment returned to the NY warehouse for repair must be accompanied by a completed customer decontamination declaration. For service and maintenance works on site, such a customer decontamination declaration must be submitted to the service technician before the start of work. No repair or maintenance of the equipment is possible without a completed form.